4614

Kelly

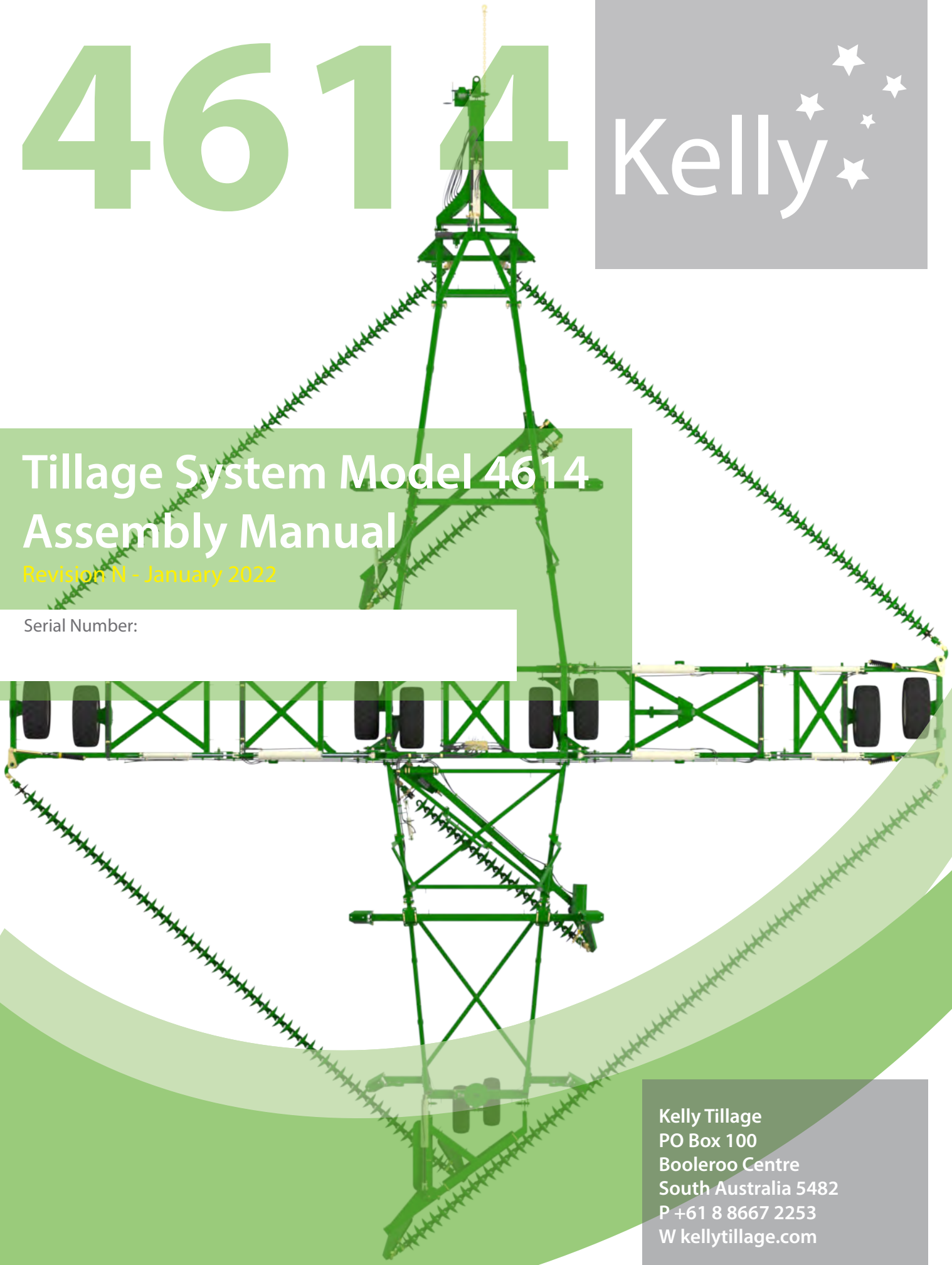

Tillage System Model 4614 Assembly Manual

Revision N - January 2022

Serial Number:

Kelly Tillage
PO Box 100
Booleroo Centre
South Australia 5482
P +61 8 8667 2253
W kellytillage.com

Thank you for choosing a Kelly Tillage product

We trust that you find the following manual clear and easy to follow. If you should require additional customer support or assistance, please do not hesitate to contact us.

Spare parts can be purchased, as required, through your local dealer or by contacting Kelly Tillage directly.

Kelly welcomes feedback. Should you have any difficulties that you wish to raise, suggestions for improvement or modifications that you feel would enhance our products we look forward to hearing from you.

Kelly Tillage
PO Box 100
Booleroo Centre SA 5482
Phone: + 61 8 8667 2253
Email: sales@kellytillage.com
Spare Parts: parts@kellytillage.com
Website: www.kellytillage.com

Spare Parts - USA
Hood & Company Inc
Springfield MO
Phone: +1 417 865 2100
Fax: +1 417 865 2105
Email: hoodco@hoodco.com

Spare Parts - Canada
Adair Sales & Marketing Company Inc
Swift Current SK
Phone: +1 306 773 0996
Fax: +1 306 778 7421
Email: info@adairreps.com

Contents

	Page no
Section 1: Unpacking	5
Section 2: Parts and Assembly	7
Section 3: Decal Application	136
Section 4: Light Kit	157
Section 5: Chain Assembly	168
Section 6: Diagrams & Charts	177
Section 7: Operation	183

This symbol indicates which bag the relevant fasteners are in

This symbol indicates which bag the relevant hydraulics are in

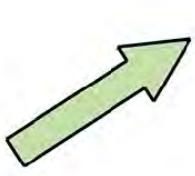

This symbol indicates which way the machine is travelling

Bolt Torque Settings

Bolt Type	Wheel nut				U Bolt			Class 8.8 Bolt					Class 10.9 Bolt		Grade 8 Bolt
Bolt Size	M18	M20	1/2"	9/16"	M10	M12	M16	M10	M12	M16	M20	M24	M20	M24	1" UNF
Ft lb	255	265	90	100	22	36	55	32	48	140	190	270	300	350	849
Nm	345	360	125	140	30	50	75	44	65	190	260	370	406	475	1151

[1] When fitting a wheel & tire to a hub, tighten the wheel nuts in a star pattern to the correct tension. To achieve this choose a wheel nut & tighten, then proceed to the opposite side of the hub to the next wheel nut & tighten & so on until all wheel nuts are tight. Then repeat the procedure to check that all nuts are tight. Do not use impact tools to tighten wheel nuts. For a guide to the correct tension of the wheel nuts please use the appropriate tension for your size wheel nuts from the Bolt Torque Settings table.

Torque values are for dry threads and surfaces however it is permissible to apply a small amount of anti corrosive oil to the threads.

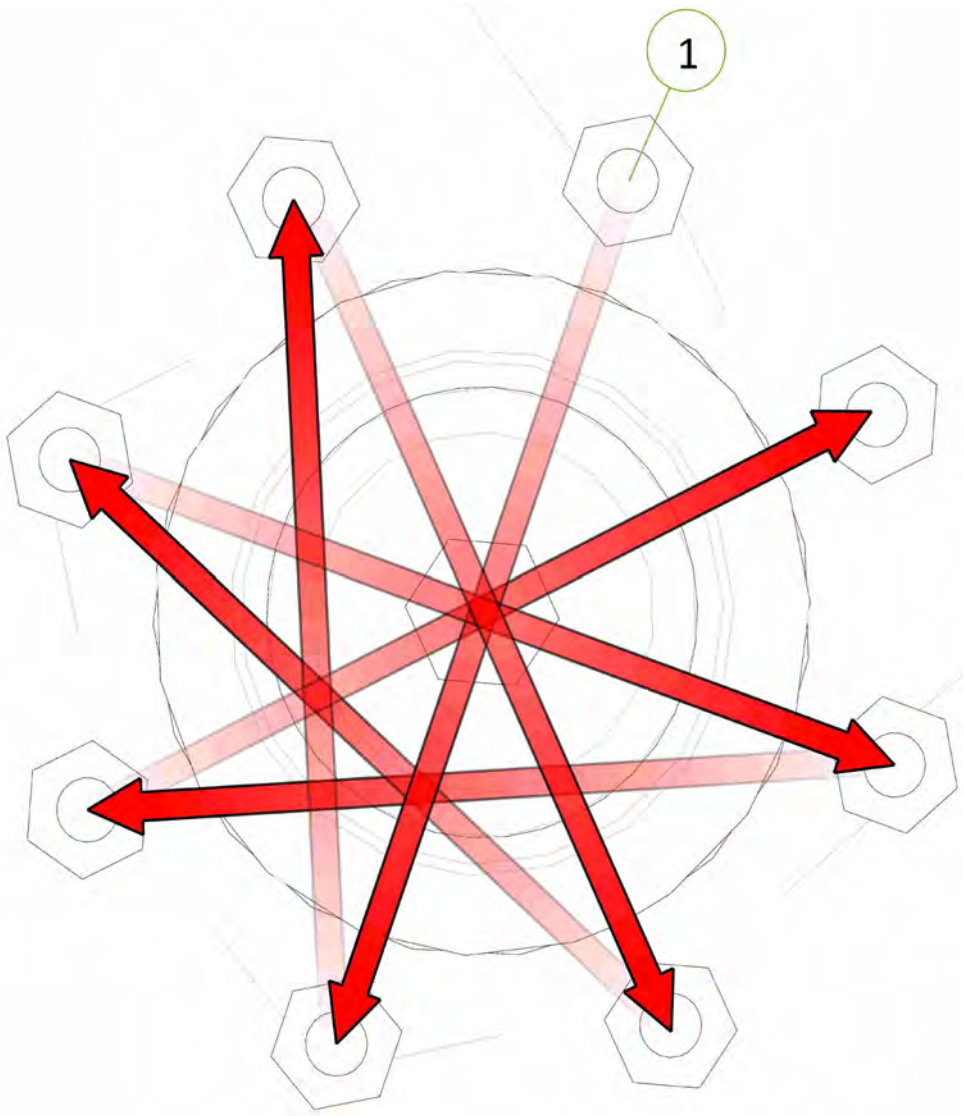

Section 1
Unpacking

CAUTION

Before cutting straps attach slings or chains and take the weight of the frames to avoid them slipping or falling and causing injury.

CAUTION

Wear eye and hand protection when cutting straps. Sharp edges are exposed as straps separate and may cause injury.

CAUTION

To avoid falling or moving components, before cutting straps attach slings or chains to individual pieces and only cut the straps holding the piece to be lifted.

- Remove boxes from rear of container one at a time using a forklift truck. Each box weighs approximately 5512 lbs (2500 kg)
- Cut straps holding bundles and separate parts and place in assembly area
- Identify parts for each machine by serial no. or description and separate. Open parts box and check that all parts are accounted for against checklist
- Once all parts have been identified machines are ready for assembly
- Read assembly instructions before proceeding.

Dealer assembly begins at page 60.

Section 2
Parts & Assembly

Fastener Bag Locations

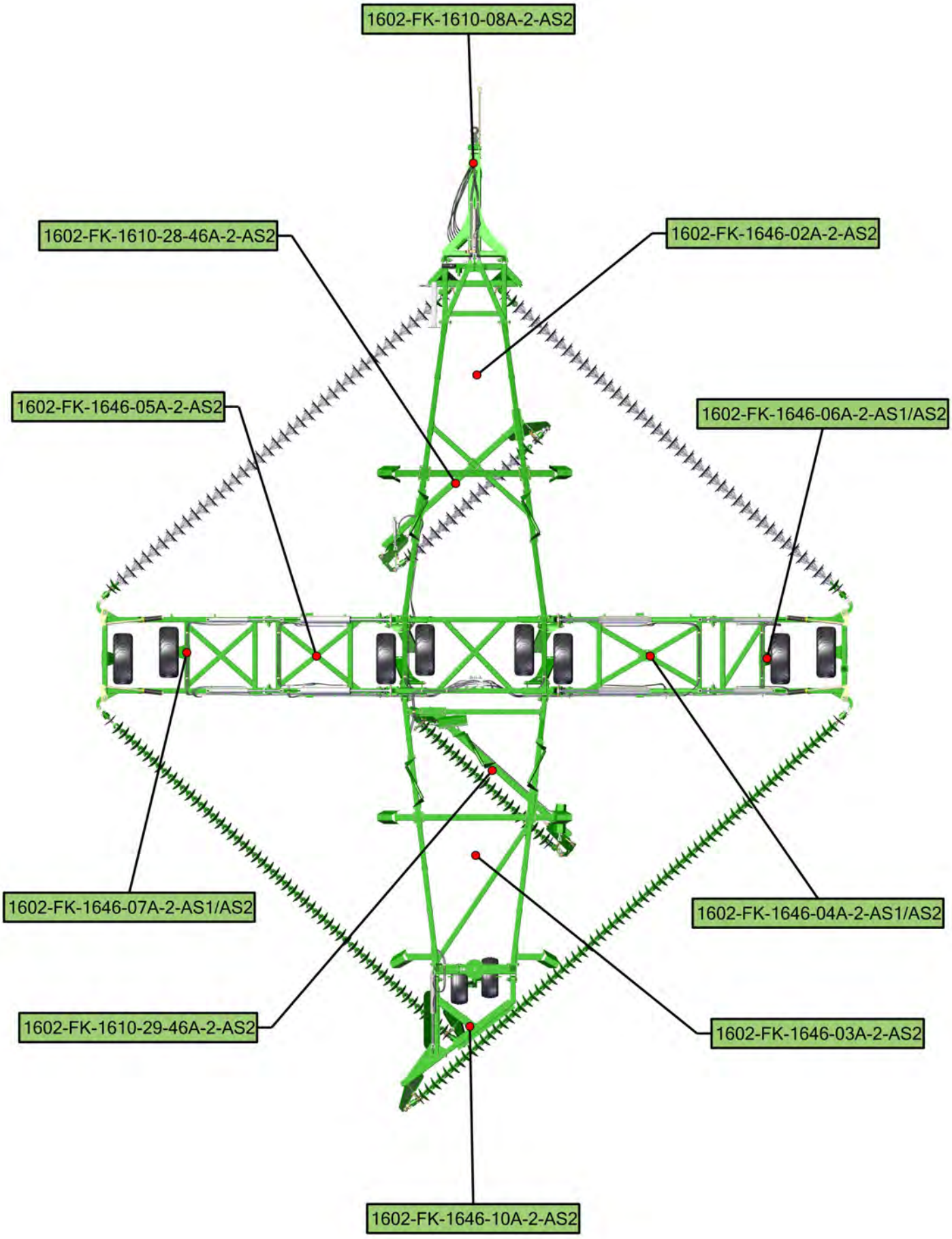

Item No.	Description	Number	Qty
1	46' Centre Frame	1646-01-2	1
2	LH Walking Axle Arm	1610-40	2
3	RH Walking Axle Arm	1610-41	2
4	1-1/2 ID x 2" DU Bush	0113-24DU32	8

Please note bushes are factory inserted

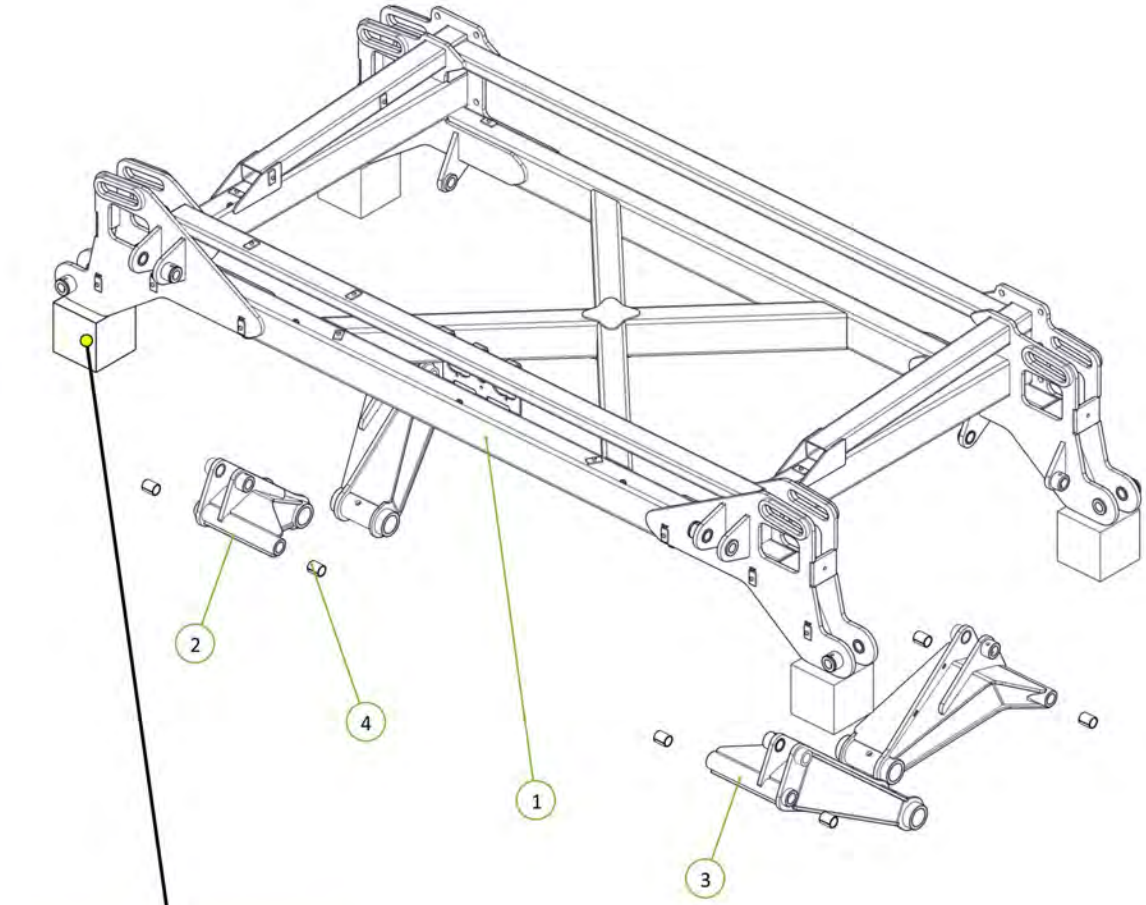

Support frame with blocks or stands during initial assembly

Item No.	Description	Number	Qty
1	Walking Axle Pivot Pin	1601-P38-525	4
2	Washer High Tensile 1 3/8"	0232-HT13-8	8
3	M12 x 90 Class 10.9 ZP Bolt	0211-1290HT	4
4	Nyloc Nut M12	0221-NYL12	4
5	Cotter Pin M13 x 63	0261-PINC1363	4

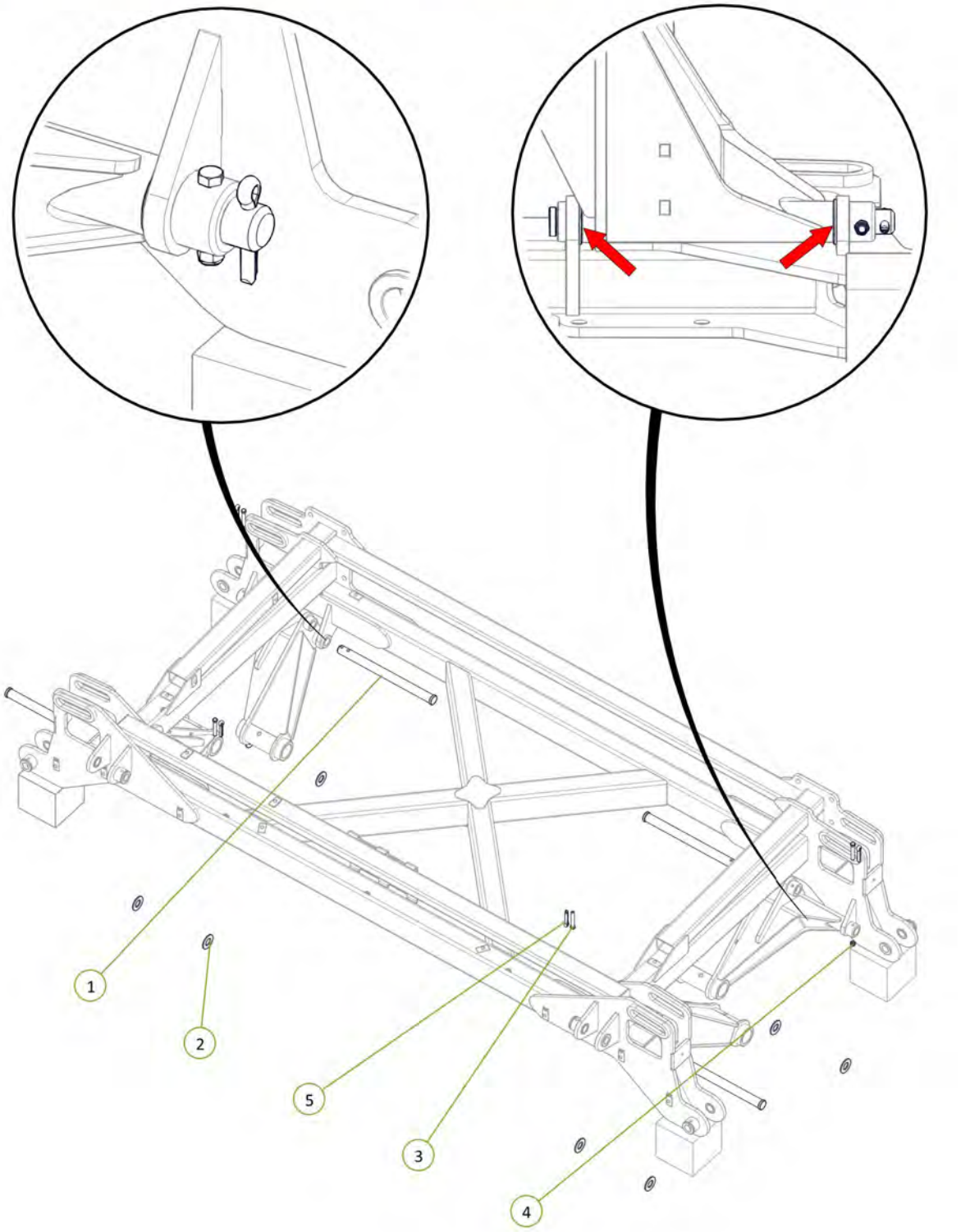

Item No.	Description	Number	Qty
1	2.75"R C/W 6 tonne 8 on 8" PCD Complete Assembly inc GS	0733-LG6080067	4
2	M20 x 120 grade 8.8 ZP Bolt	0211-20120	4
3	Nyloc Nut M20	0221-NYL20	4

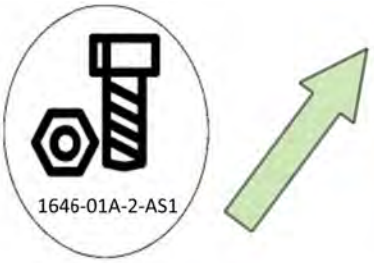

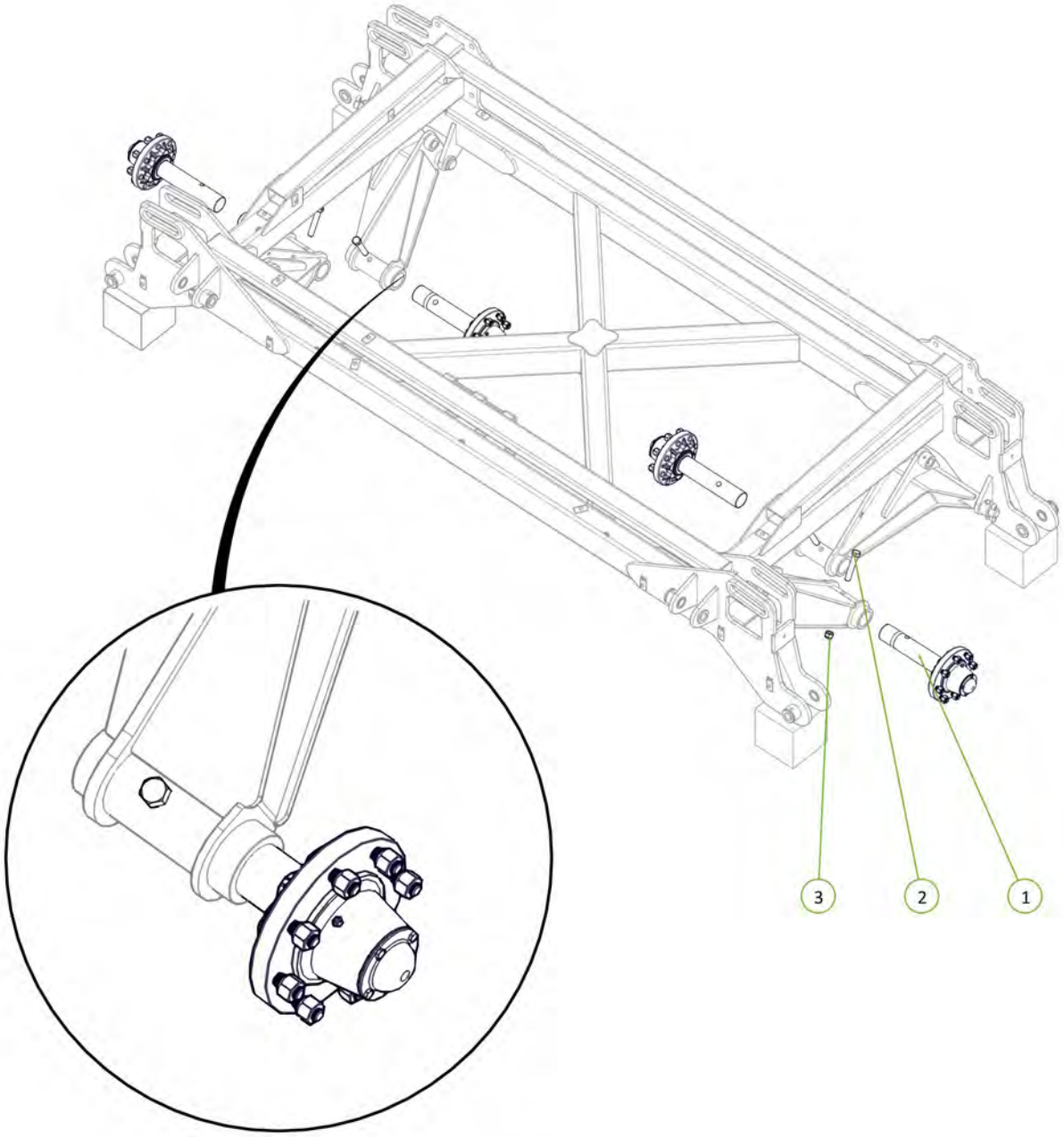

Item No.	Description	Number	Qty
1	Wing Folding Buffer	1201-12	4
2	M16 x 55 grade 8.8 zp Bolt	0211-1655	4
3	Washer Flat M16	0231-F16	4
4	Nyloc Nut M16	0221-NYL16	4

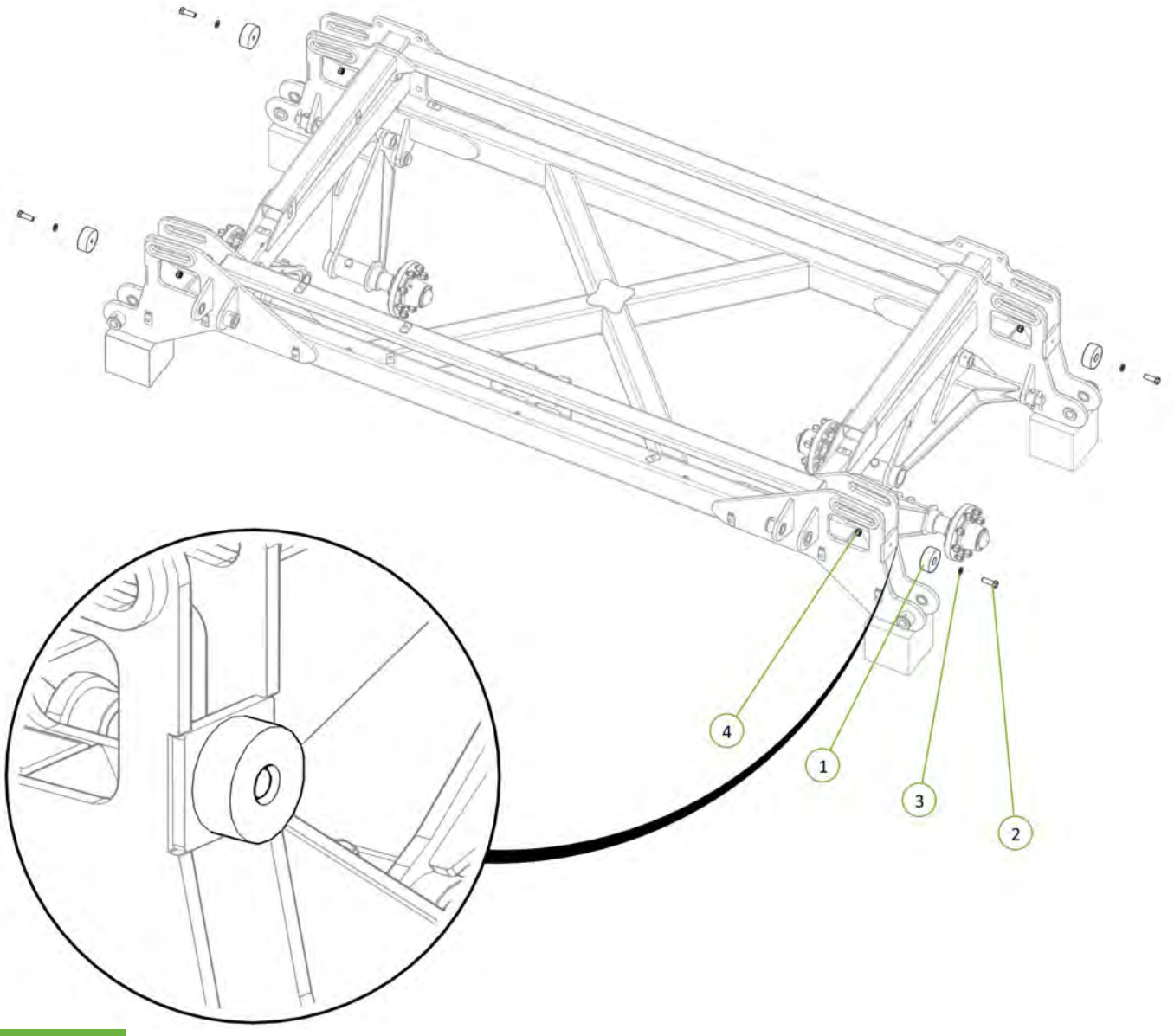

Item No.	Description	Number	Qty
1	46' RH Inner Wing Frame	1646-04-2	1
2	35 ID x 30mm DU Bush	0113-MB3530DU	4
3	PCH Wing Pivot Pin	0801-10-08-235	2
4	M12 x 90 Class 10.9 ZP Bolt	0211-1290HT	2
5	Nyloc Nut M12	0221-NYL12	2
6	Cotter Pin M13 x 63	0261-PINC1363	2

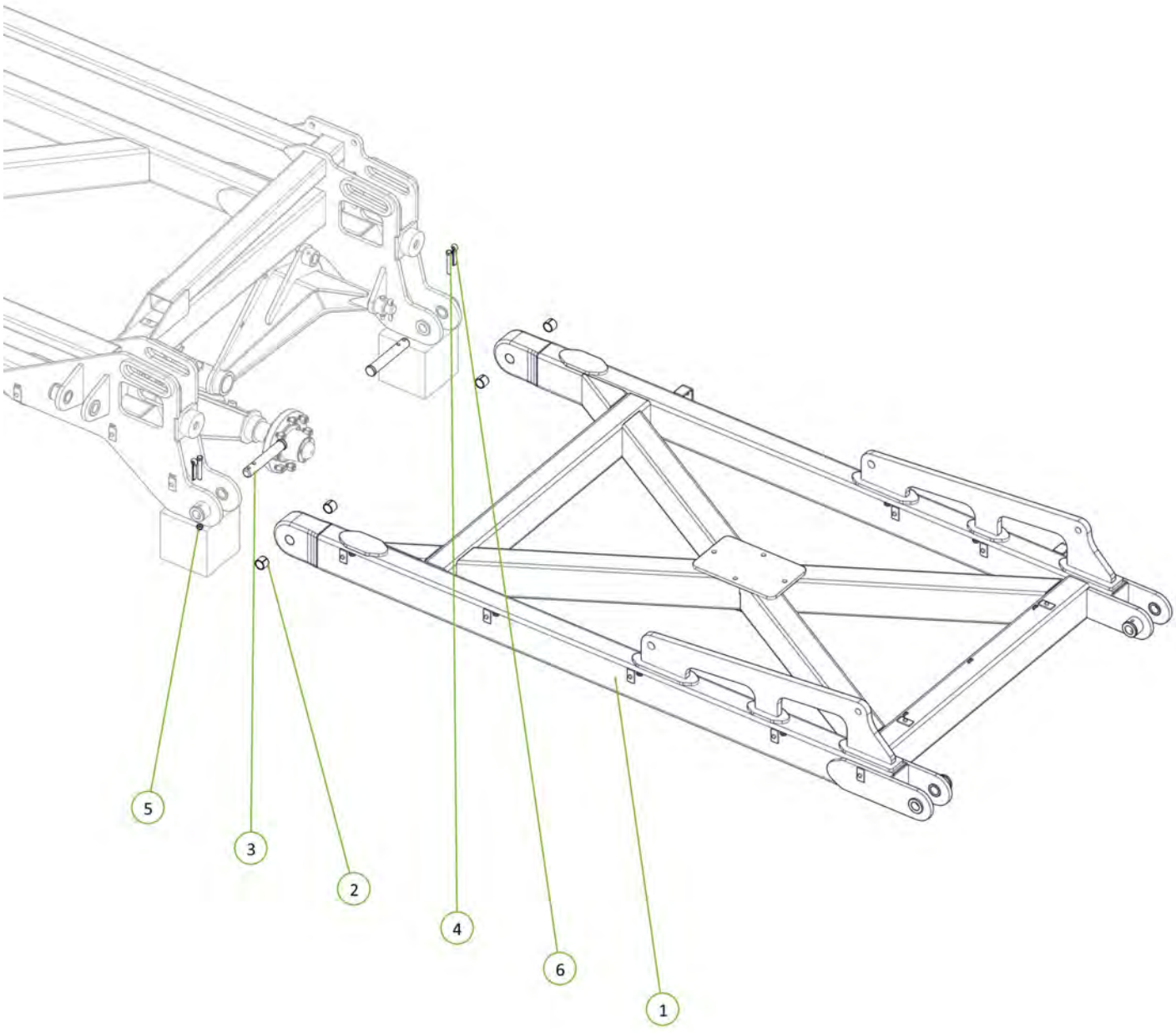

Item No.	Description	Number	Qty
1	46' Inner Wing Post	1646-04P-2	1
2	M16 x 50 Grade 8.8 ZP Bolt	0211-1650	4
3	Nyloc Nut M16	0221-NYL16	4
4	Washer Flat M16	0231-F16	8

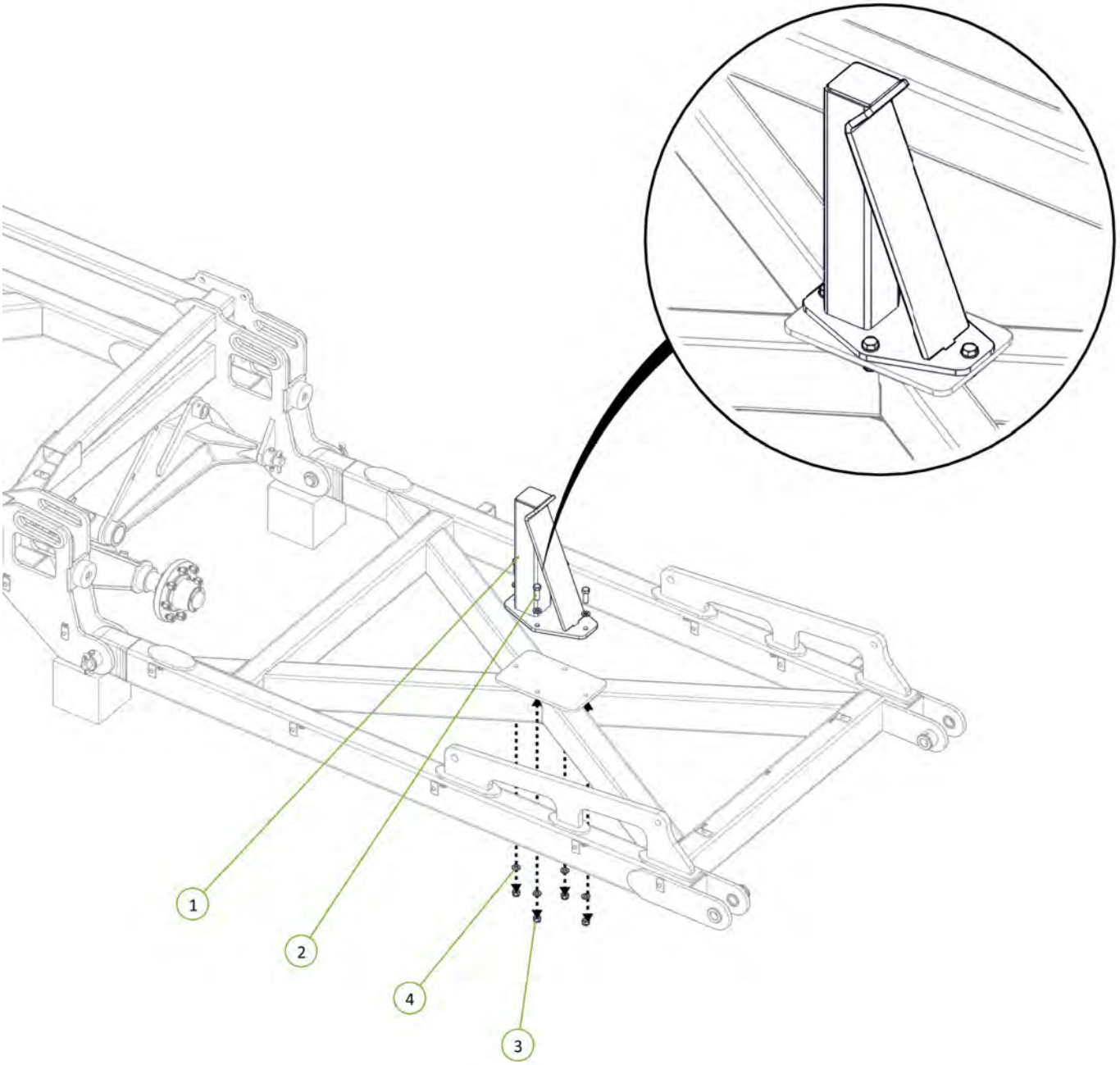

Item No.	Description	Number	Qty
1	46' RH Outer Wing Frame	1646-06-2	1
2	35 ID x 30mm DU Bush	0113-MB3530DU	4
3	PCH Wing Pivot Pin	0801-10-08-235	2
4	M12 x 90 Class 10.9 ZP Bolt	0211-1290HT	2
5	Nyloc Nut M12	0221-NYL12	2
6	Cotter Pin M13 x 63	0261-PINC1363	2

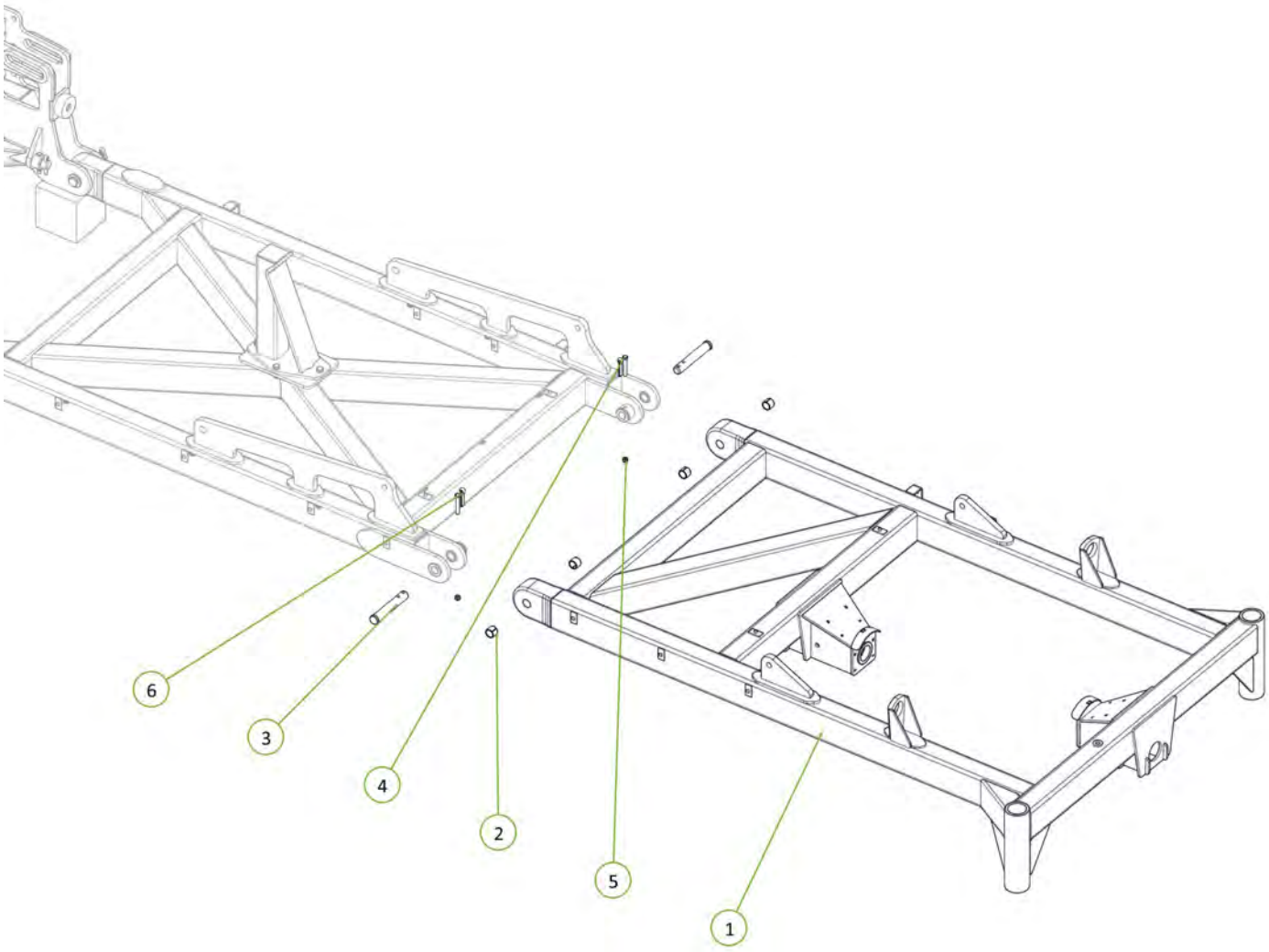

Item No.	Description	Number	Qty
1	46' Outer Wing Post	1646-06P-2	1
2	U-Bolt M16 x 190 Deep x 106 Wide	0271-16190106U	2
3	Nyloc Nut M16	0221-NYL16	4
4	Washer Flat M16	0231-F16	4

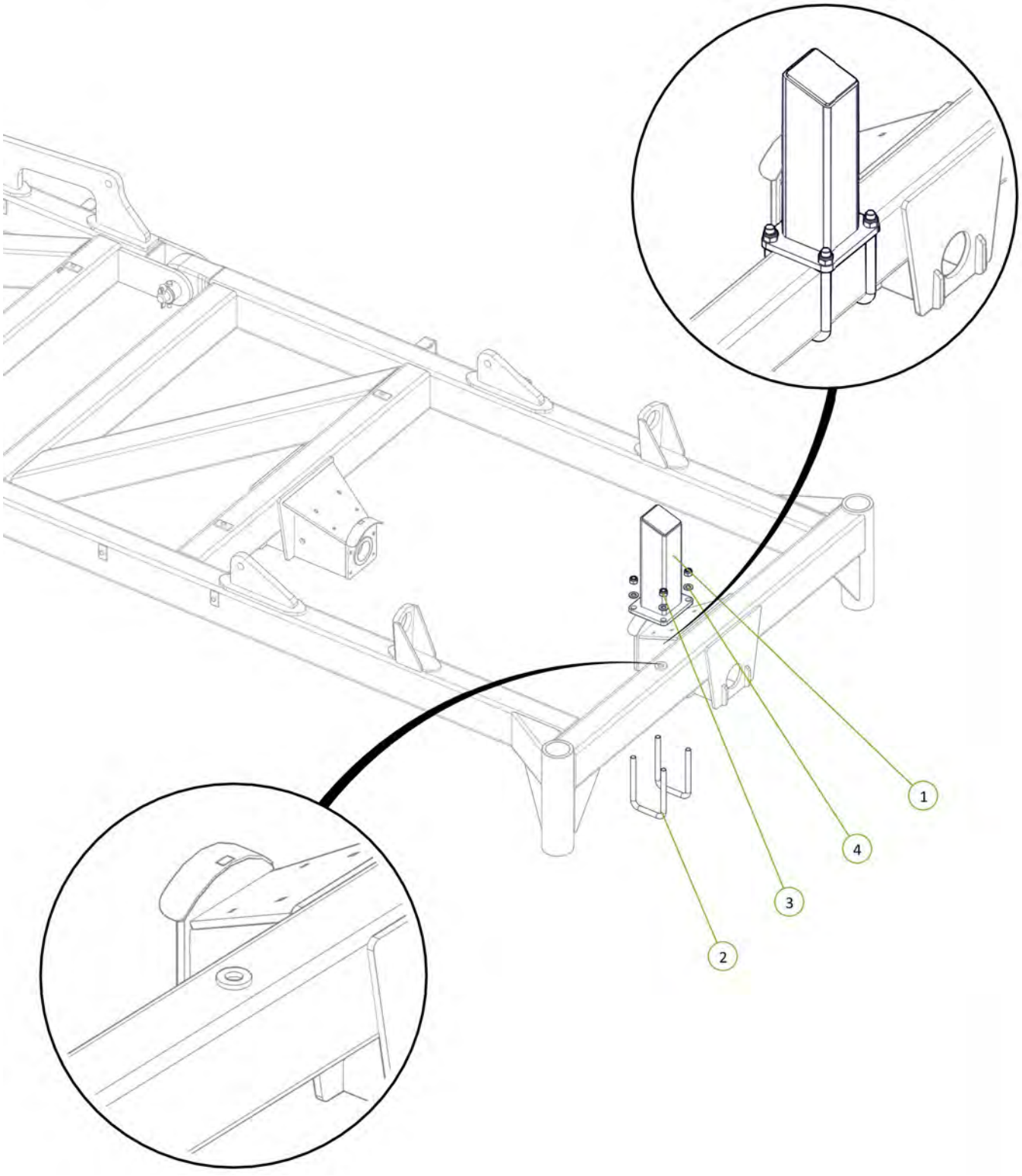

Item No.	Description	Number	Qty
1	2.75"R C/W 6 tonne 8 on 8" PCD Complete Assembly inc GS	0733-LG6080067	2
2	M20 x 170 grade 8.8 ZP Bolt	0211-20170	2
3	Nyloc Nut M20	0221-NYL20	2
4	Washer Flat M20	0231-F20	4

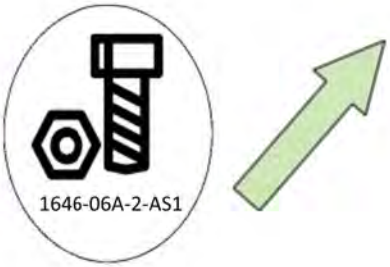

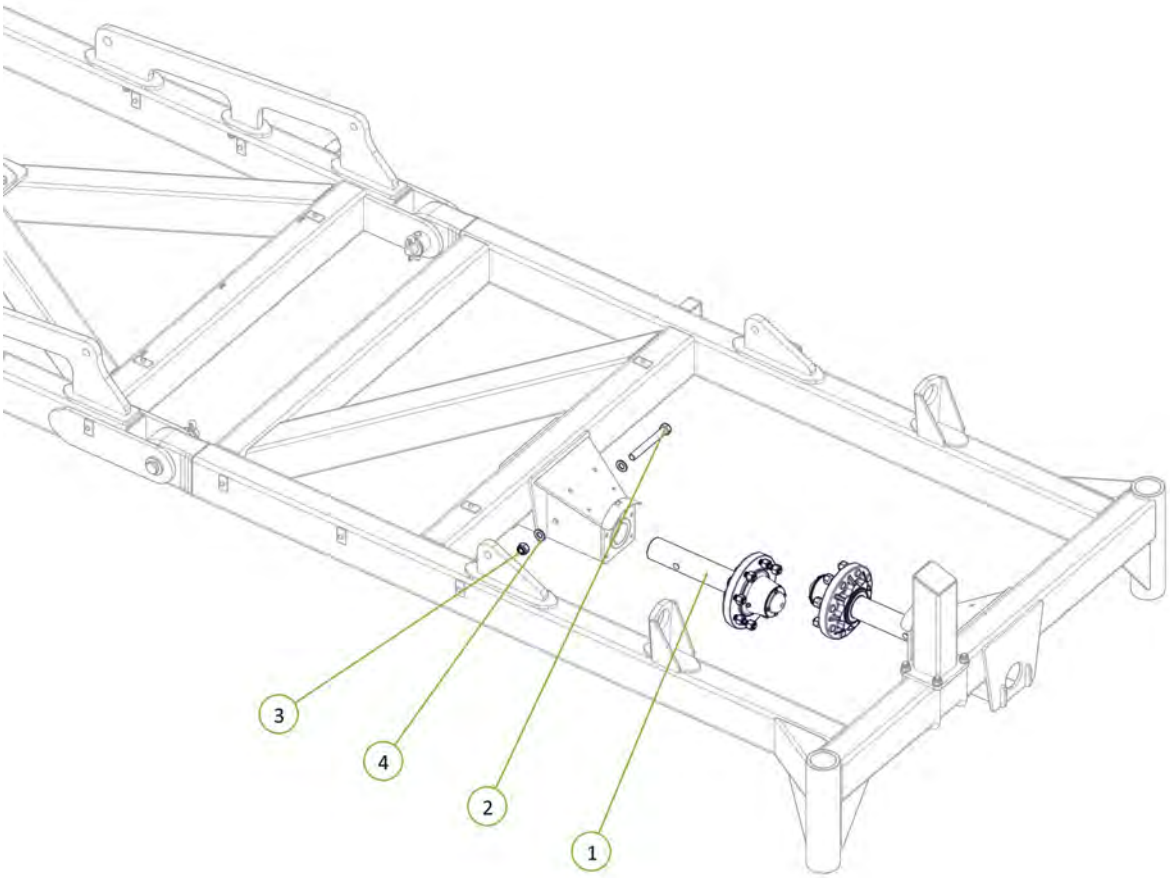

Dual outer wing wheel option shown

Item No.	Description	Number	Qty
1	46' LH Inner Wing Frame	1646-05-2	1
2	35 ID x 30mm DU Bush	0113-MB3530DU	8
3	PCH Wing Pivot Pin	0801-10-08-235	2
4	M12 x 90 Class 10.9 ZP Bolt	0211-1290HT	2
5	Nyloc Nut M12	0221-NYL12	2
6	Cotter Pin M13 x 63	0261-PINC1363	2

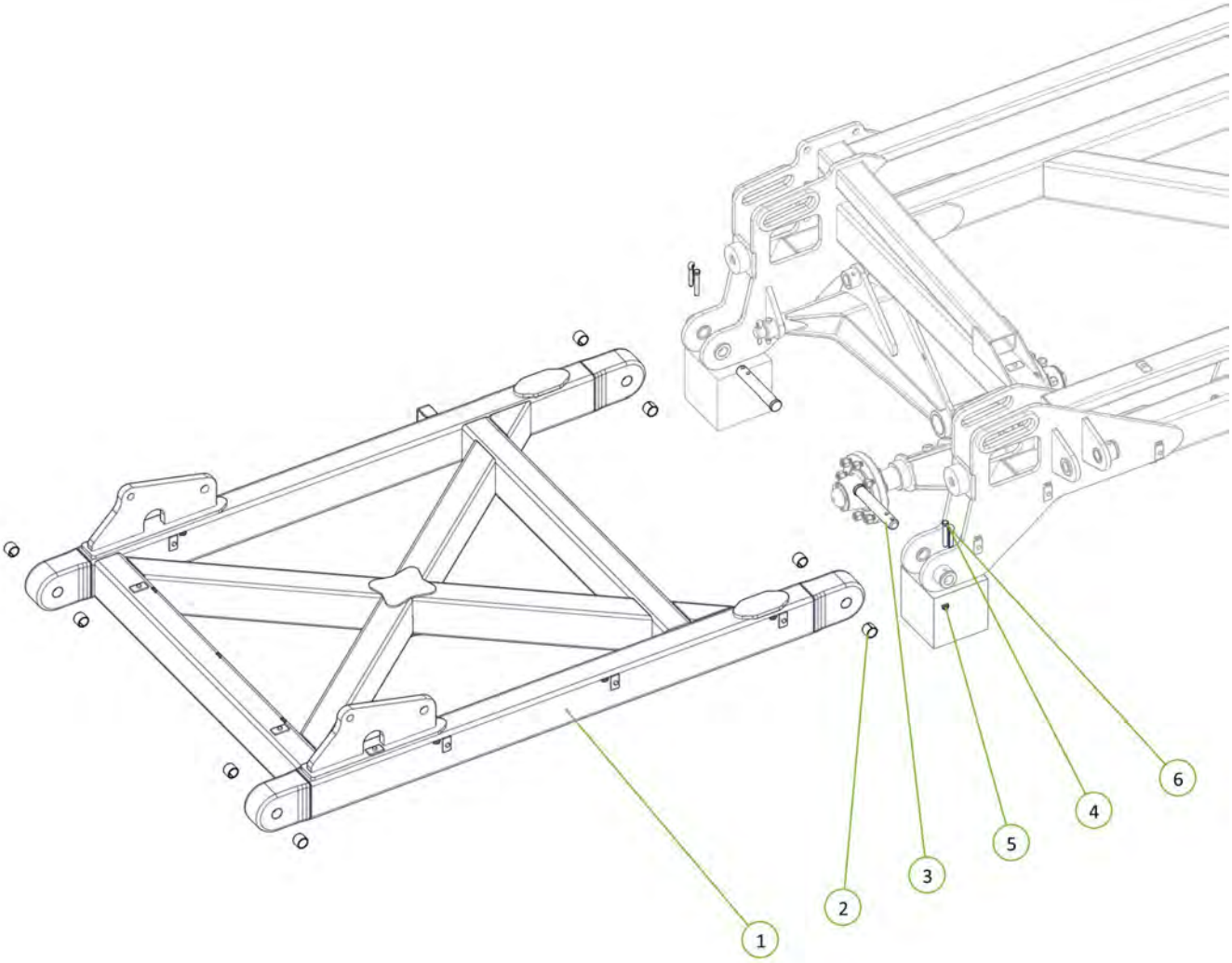

Item No.	Description	Number	Qty
1	46' LH Outer Wing Frame	1646-07-2	1
2	PCH Wing Pivot Pin	0801-10-08-235	2
3	M12 x 90 Class 10.9 ZP Bolt	0211-1290HT	2
4	Nyloc Nut M12	0221-NYL12	2
5	Cotter Pin M13 x 63	0261-PINC1363	2

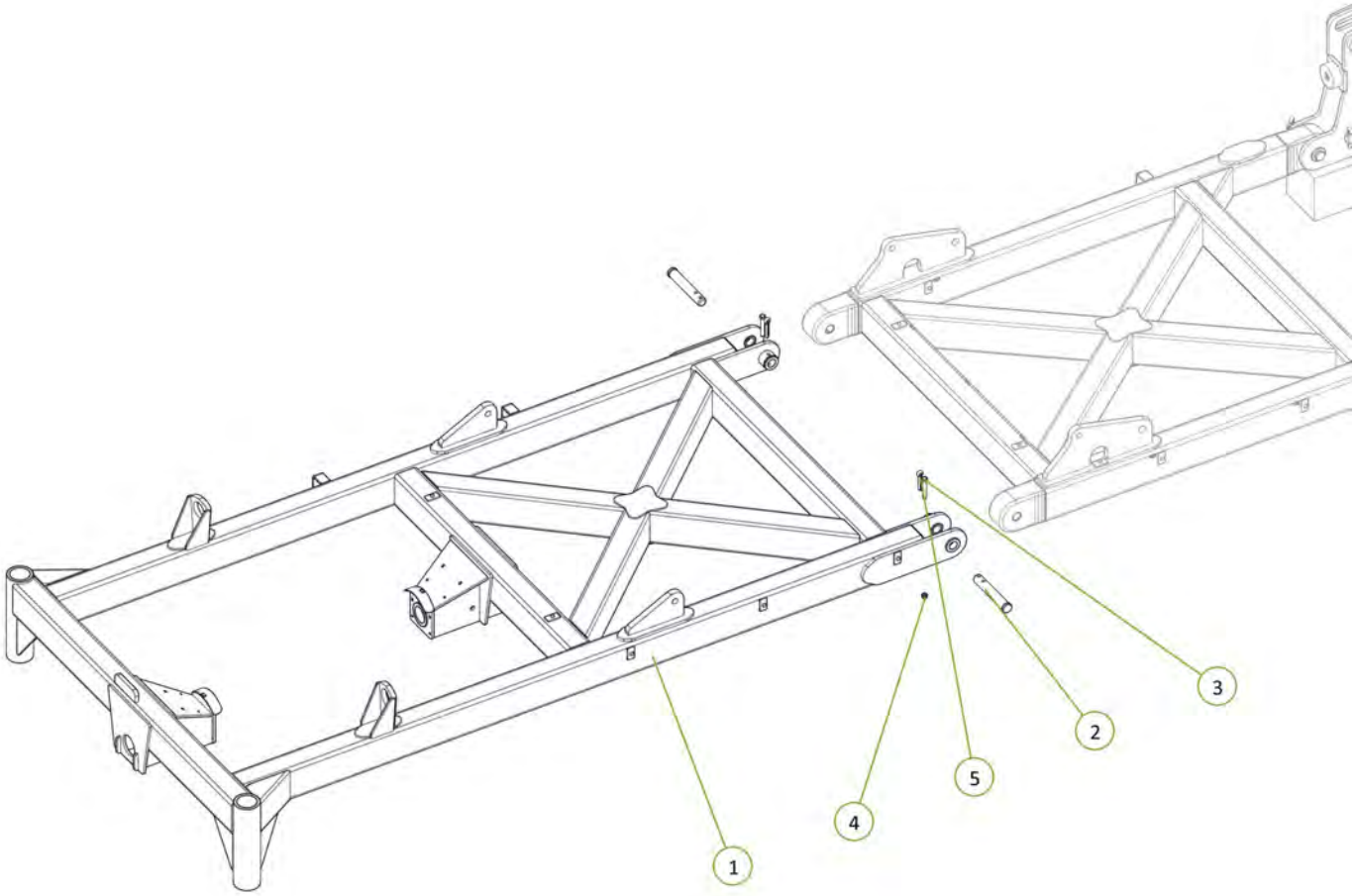

Item No.	Description	Number	Qty
1	2.75"R C/W 6 tonne 8 on 8" PCD Complete Assembly inc GS	0733-LG6080067	2
2	M20 x 170 grade 8.8 ZP Bolt	0211-20170	2
3	Nyloc Nut M20	0221-NYL20	2
4	Washer Flat M20	0231-F20	4

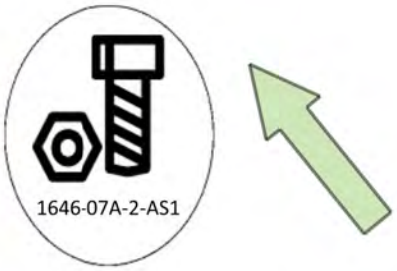

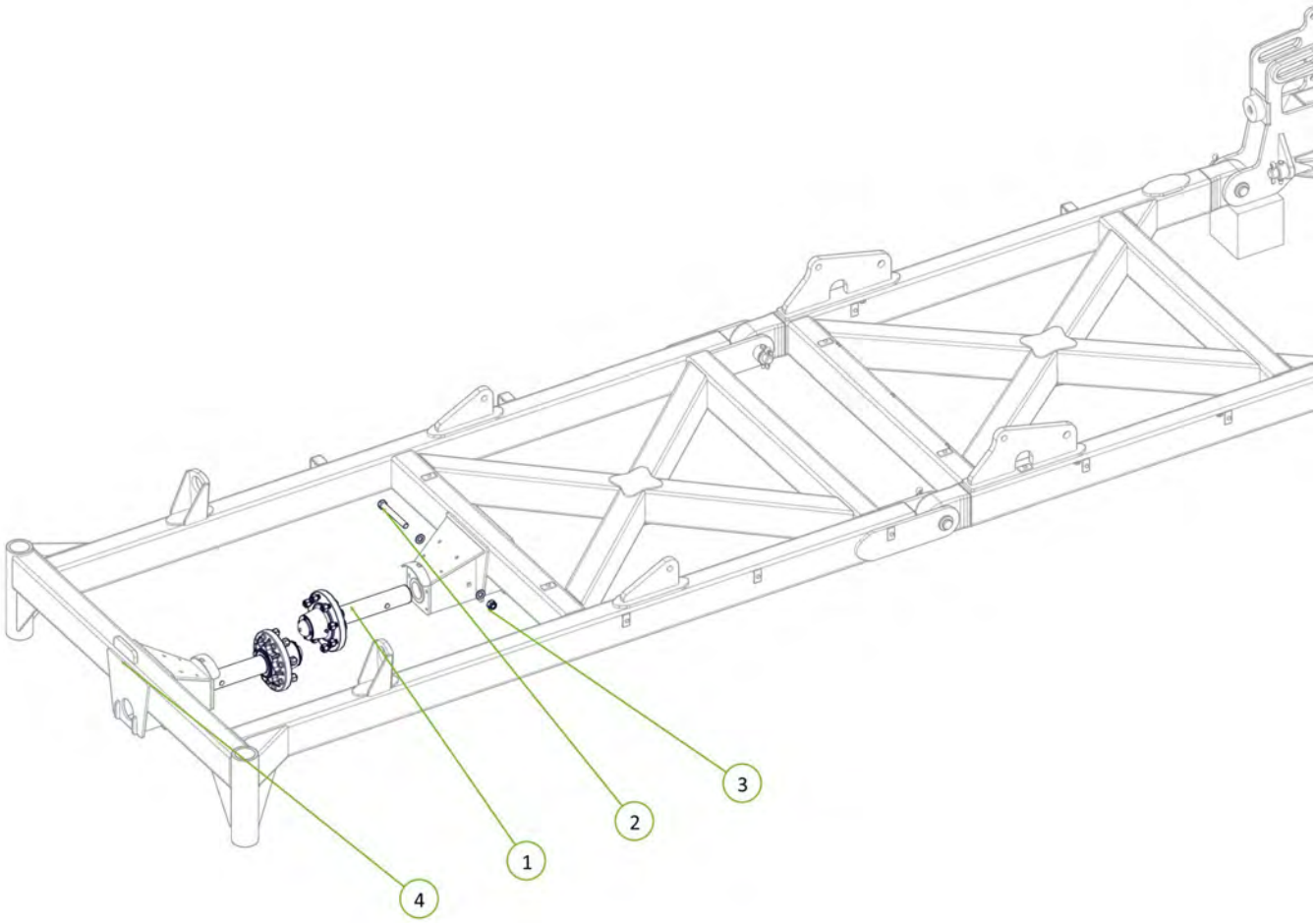

Item No.	Description	Number	Qty
1	Dual Circuit 3 Stage Sequence Manifold V12.5	0802-692196	1
2	M10 x 30 grade 8.8 ZP Bolt	0211-1030	6
3	Washer Spring M10	0231-S10	6
4	Washer Flat M10	0231-F10	6

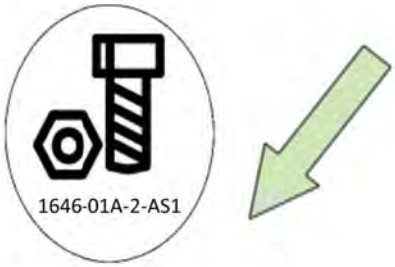

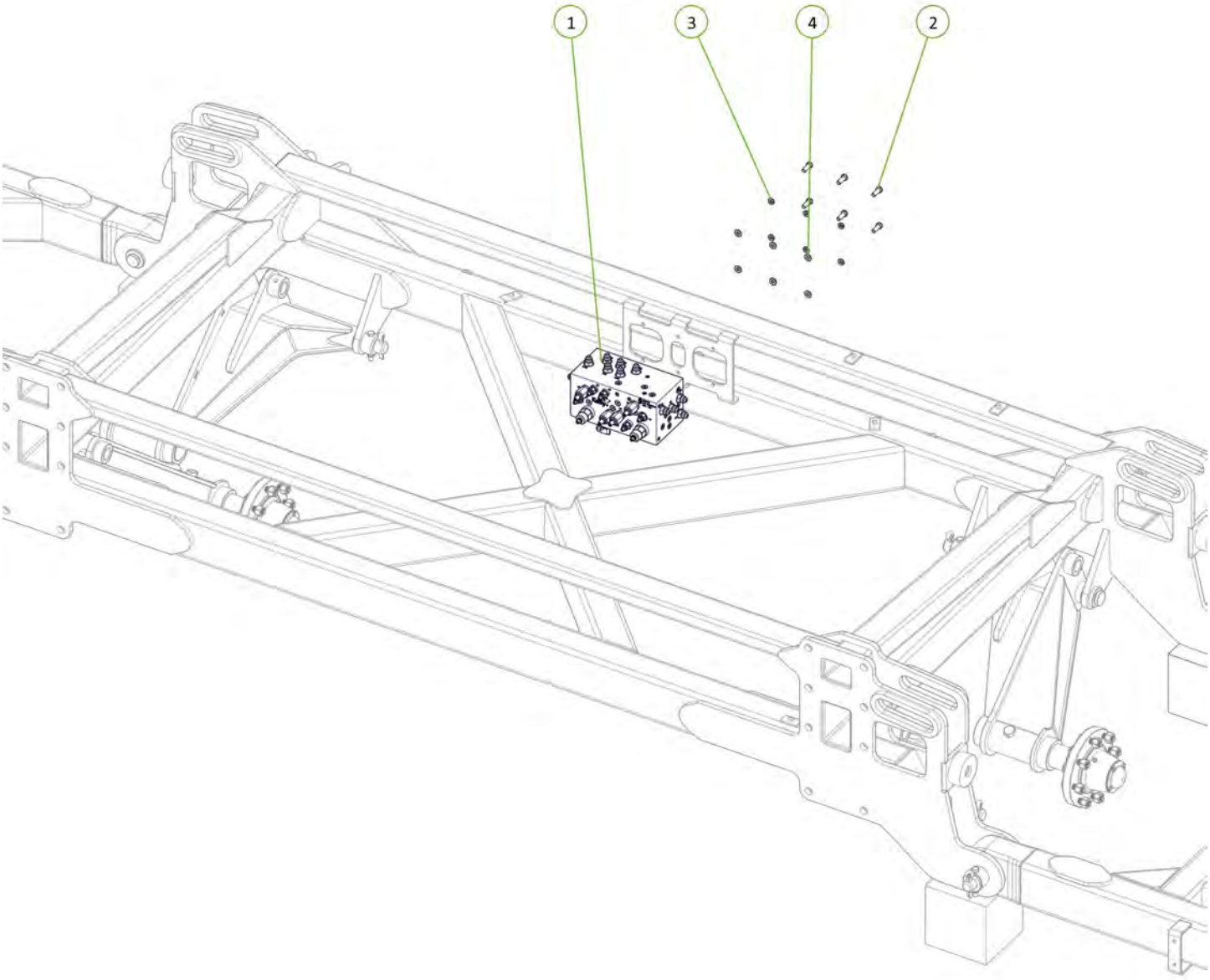

Item No.	Description	Number	Qty
1	3" Bore x 24" Stroke 1.5" Rod Hydraulic Cylinder Side Port	0311-324STSP	2

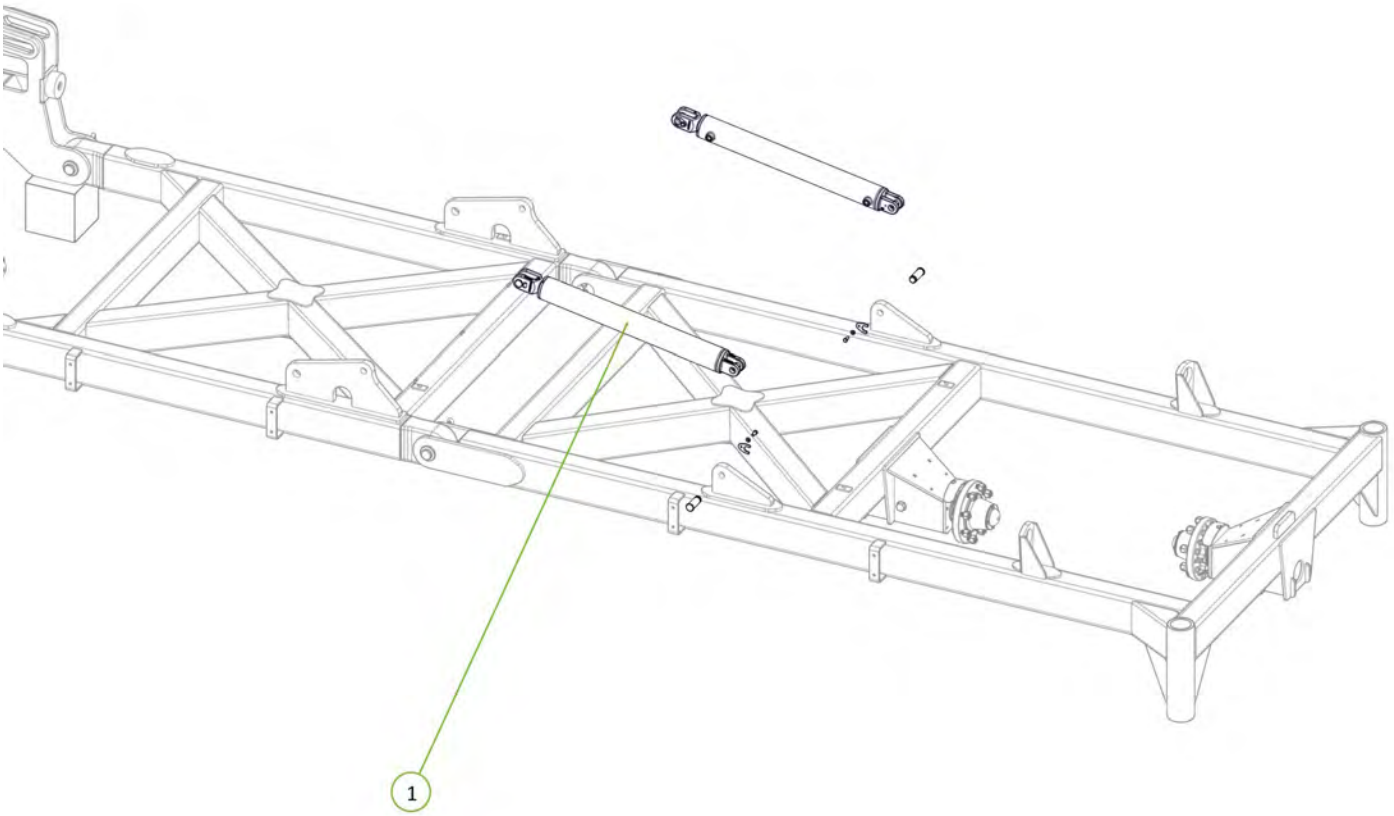

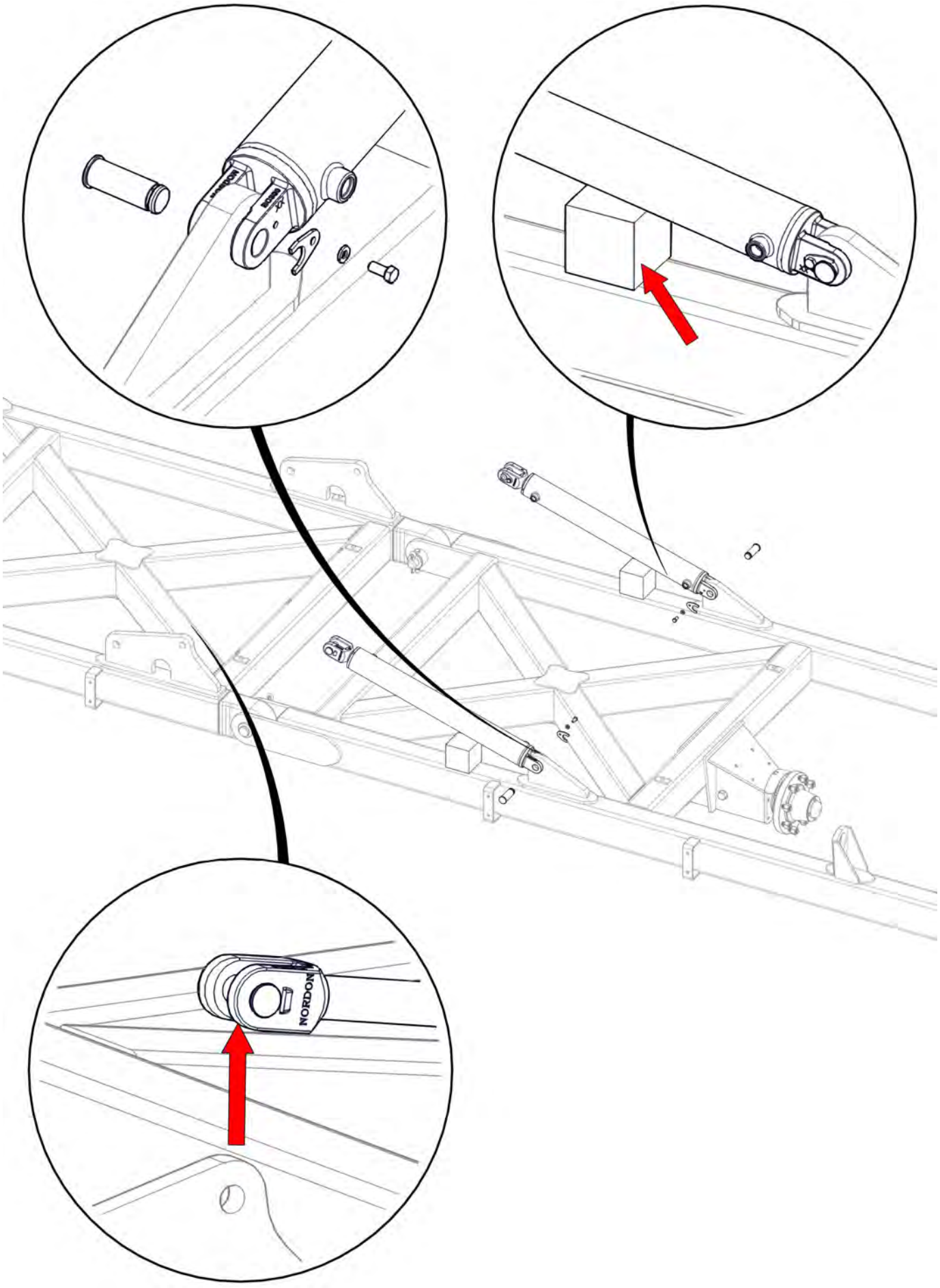
NORDKAP

Item No.	Description	Number	Qty
1	3/4" JIC Male 3/4" UN O Ring Male 90° Elbow	0323-S91-1212	4

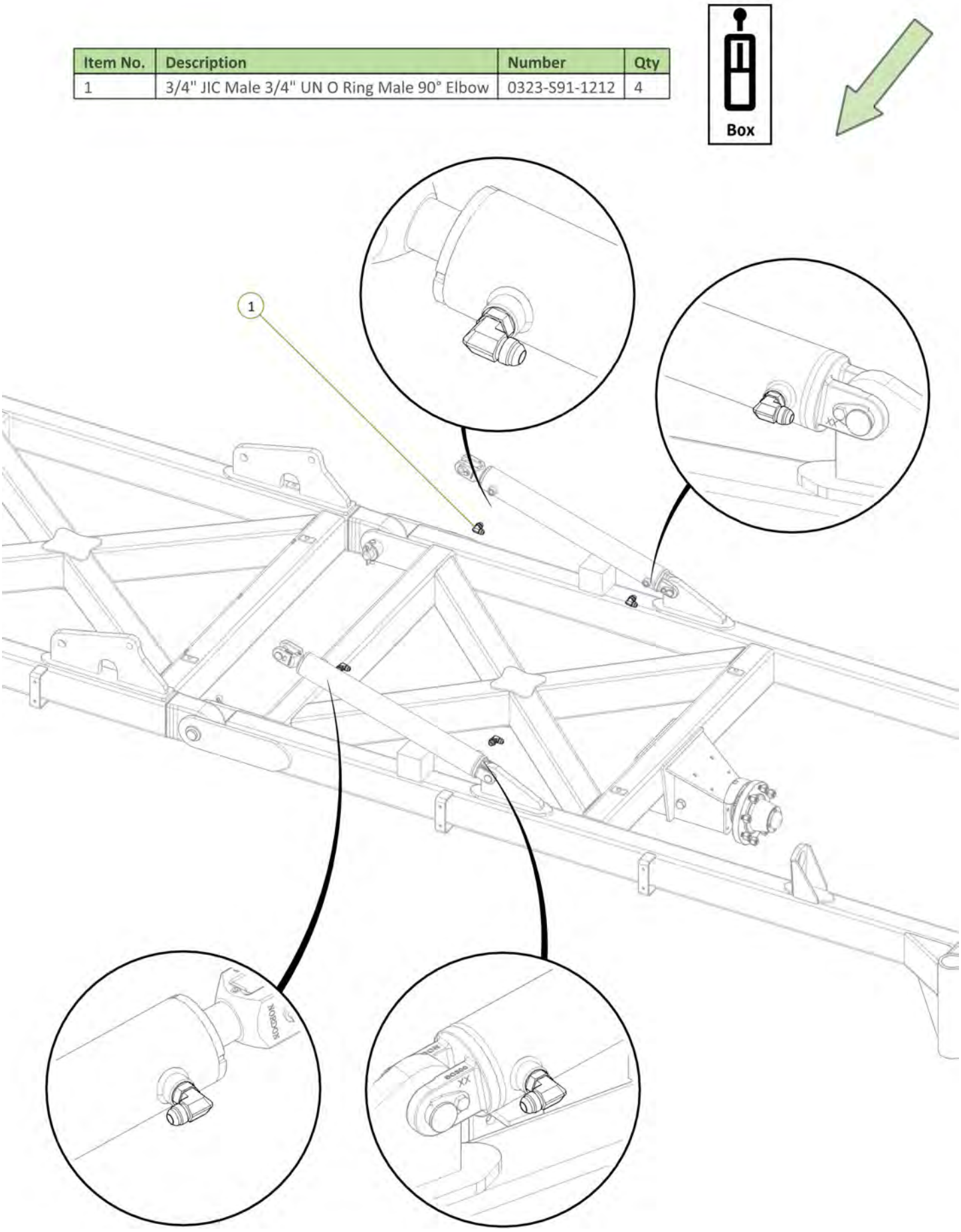

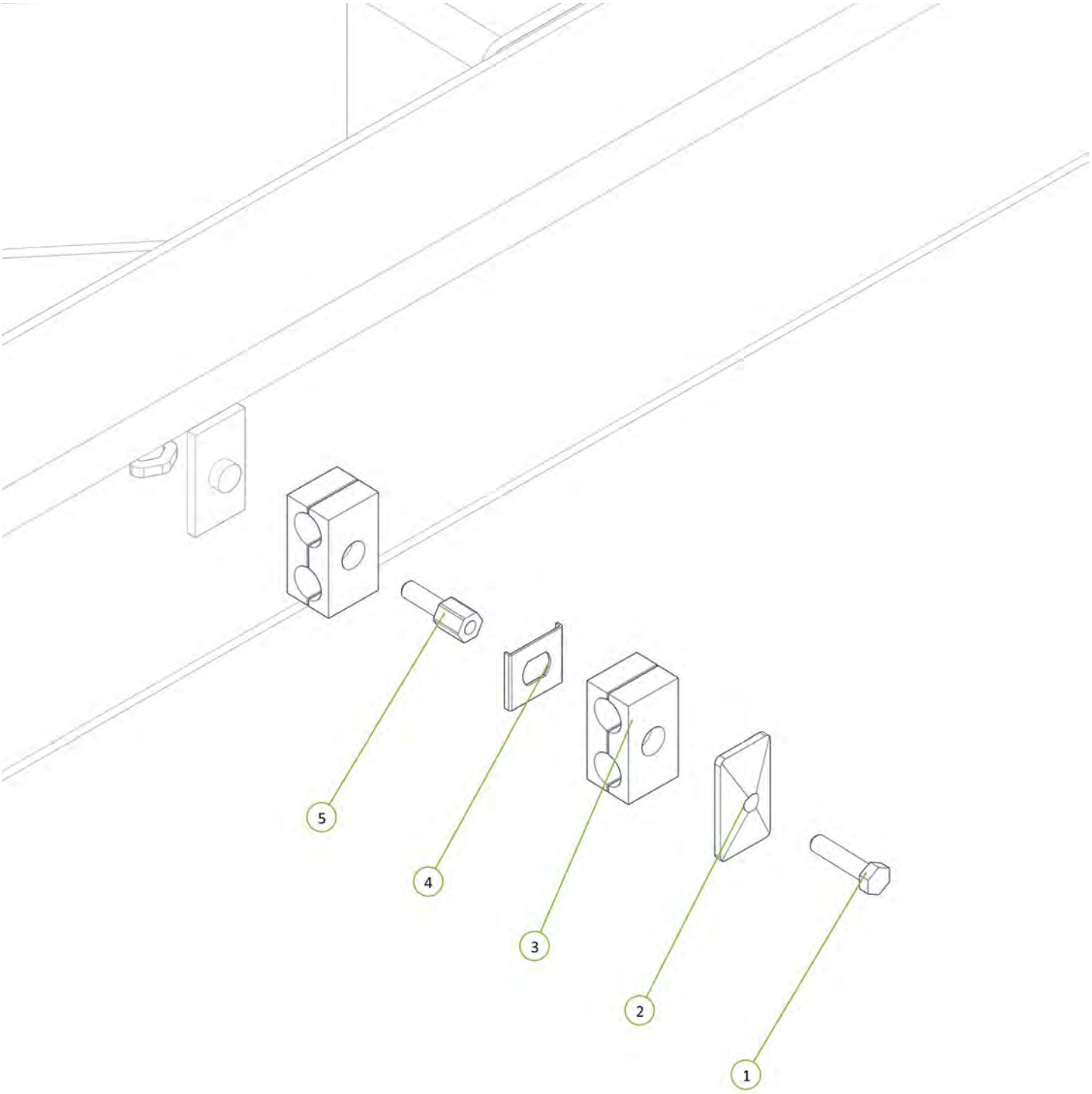

Item No.	Description	Number	Qty
1	Double Clamp Bolt Group 2	0325-RCD-2BH	1
2	Clamp top plate group 2	0325-RCD-2PT	1
3	17mm Clamp Jaws (Pair)	0325-RCD-17J	2
4	Double Clamp Stacking Plate (Non Ryco)	0325-SI-2-5D-W3	1
5	Double Clamp Stacking Bolt Group 2	0325-RCD-2BS	1

Item No.	Description	Number	Qty
1	LH Sequence Valve LE Port to LH Outer Wing Extend Tee	H46-2-21	1
2	LH Sequence Valve LR Port to LH Outer Wing Cylinder Retract Port	H46-2-24	1
3	3/4" JIC Male Tee 3/4" JIC Male Tee 3/4" JIC Male Tee	0324-S19-121212	2

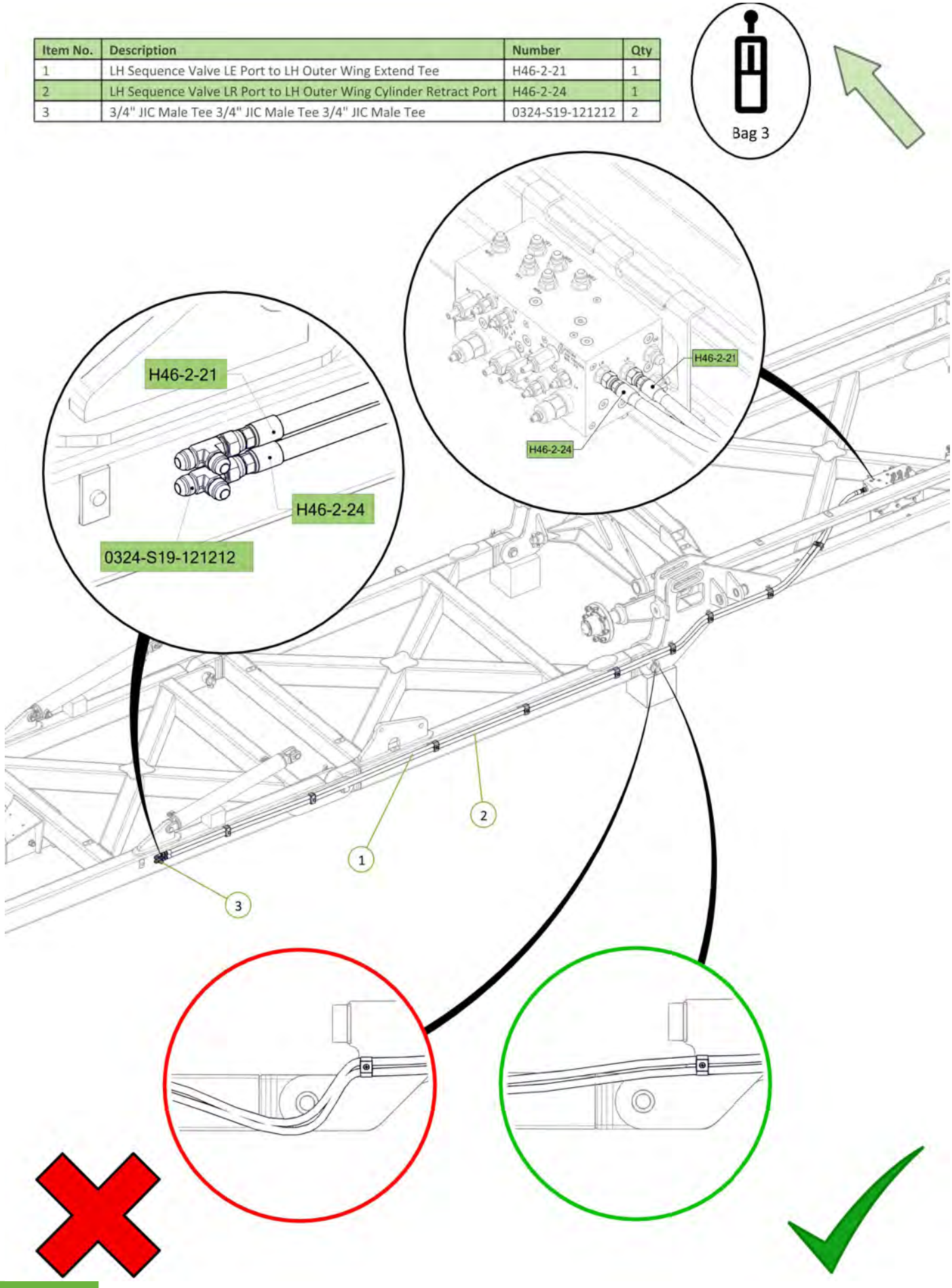

Item No.	Description	Number	Qty
1	LH Outer Wing Extend Tee to LH Inner Wing Front Cylinder Extend Port	H46-2-23	1
2	LH Outer Wing Retract Tee to LH Inner Wing Front Cylinder Retract Port	H46-2-26	1

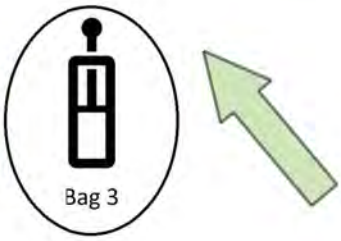

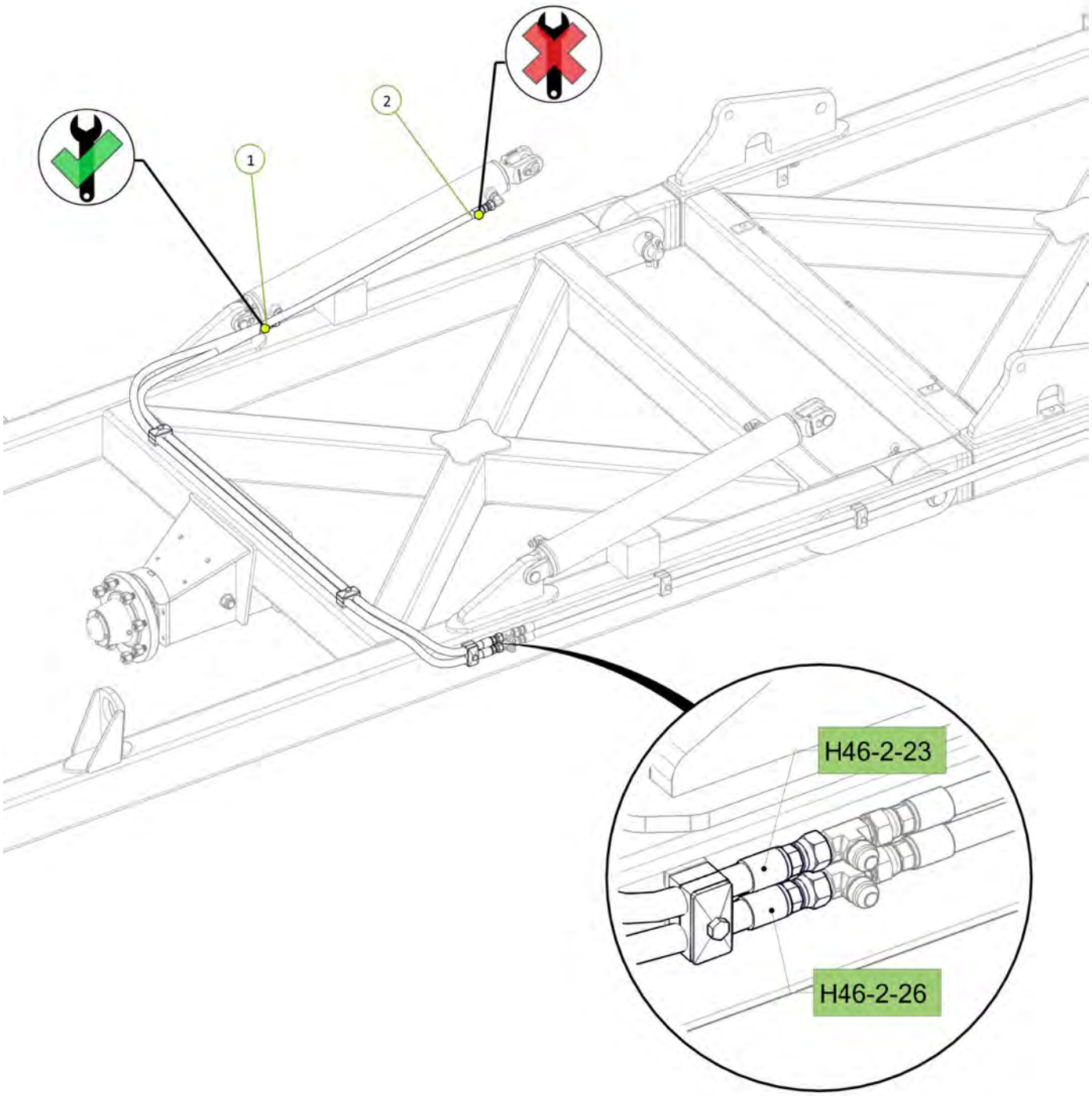

Item No.	Description	Number	Qty
1	LH Outer Wing Extend Tee to LH Inner Wing Rear Cylinder Extend Port	H46-2-22	1
2	LH Outer Wing Retract Tee to LH Inner Wing Rear Cylinder Retract Port	H46-2-25	1

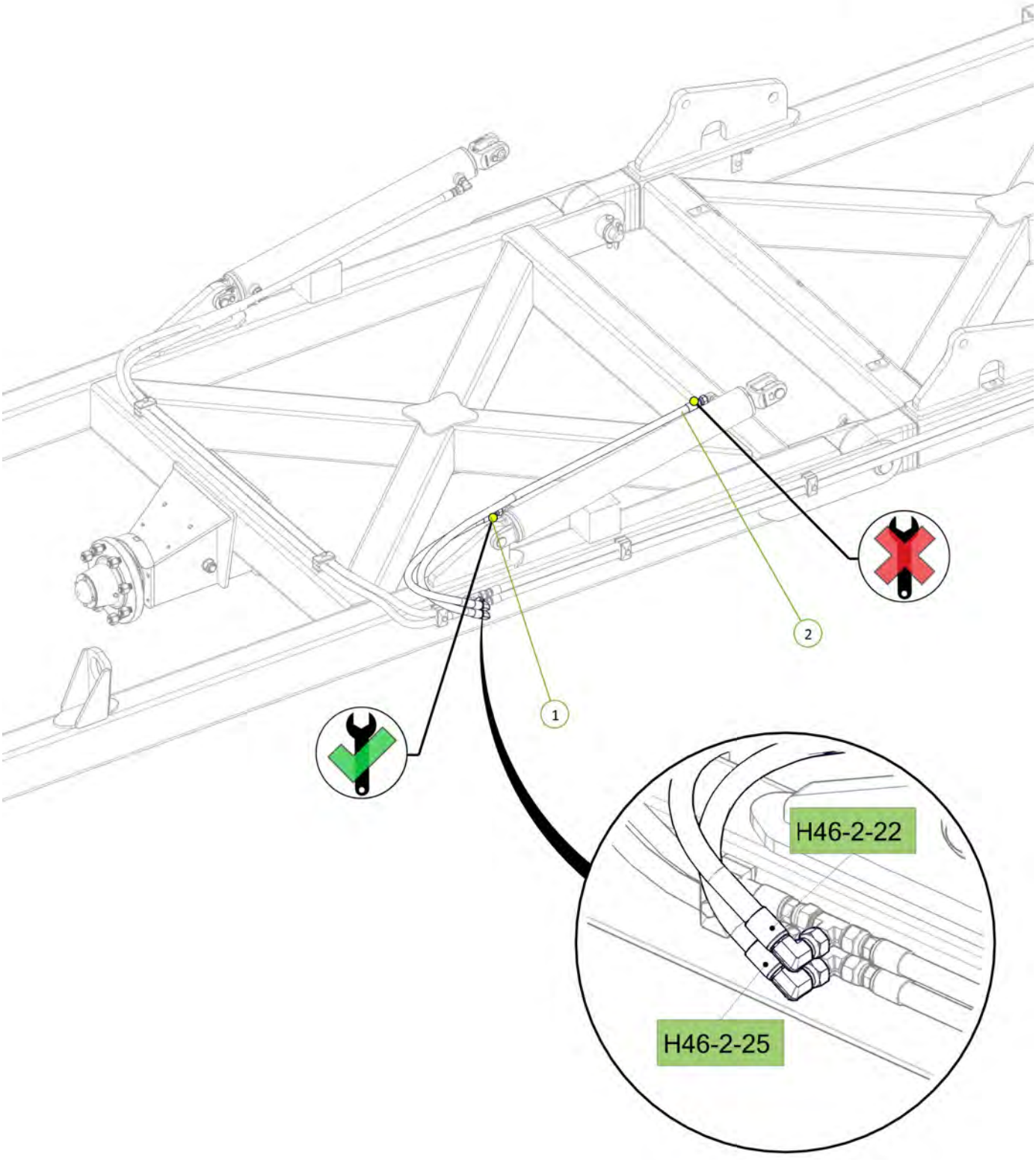

Item No.	Description	Number	Qty
1	5" Bore 30" Stroke 3 1/8" S/Tube 2" Rod Hydraulic Cylinder	0311-530STSP	2

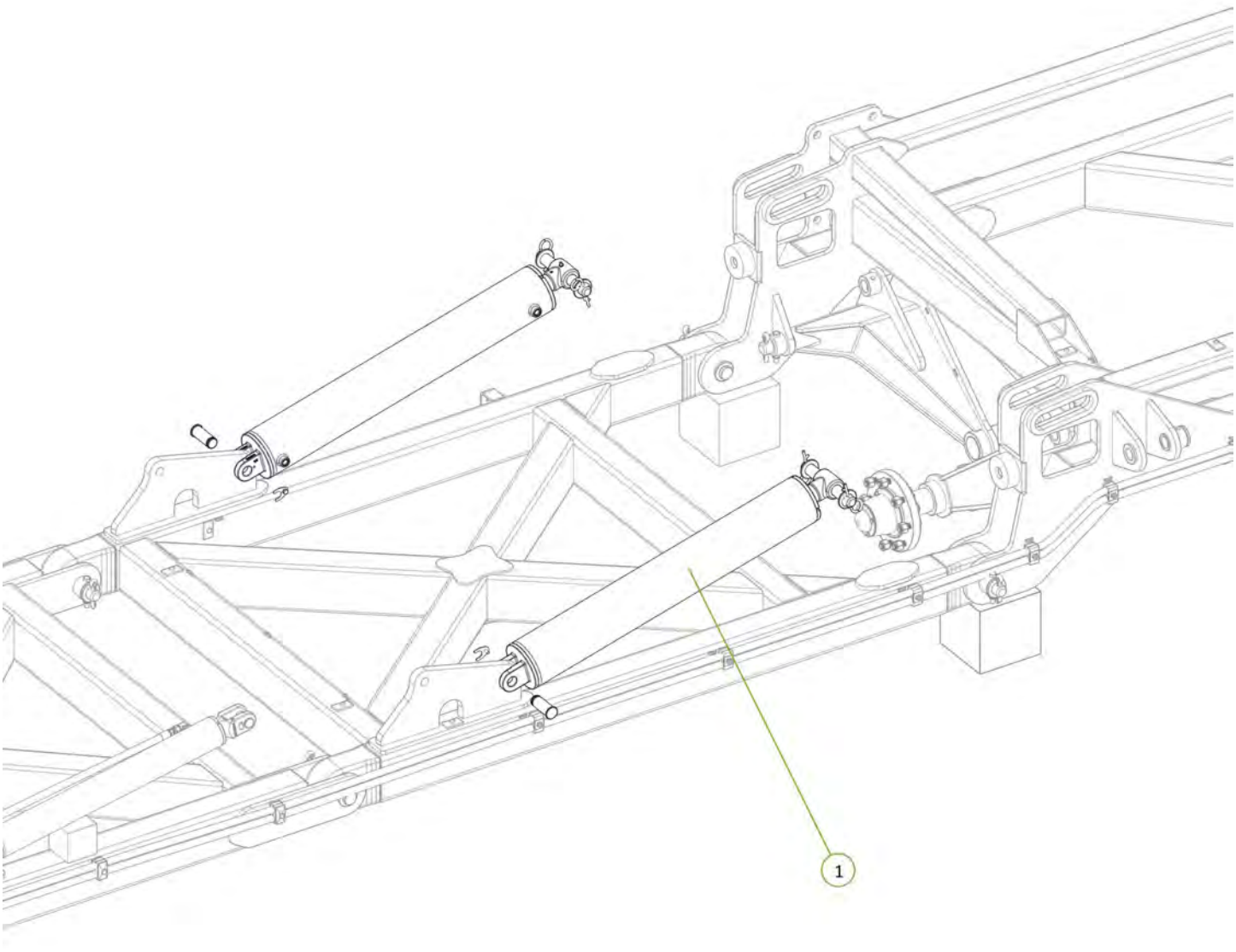

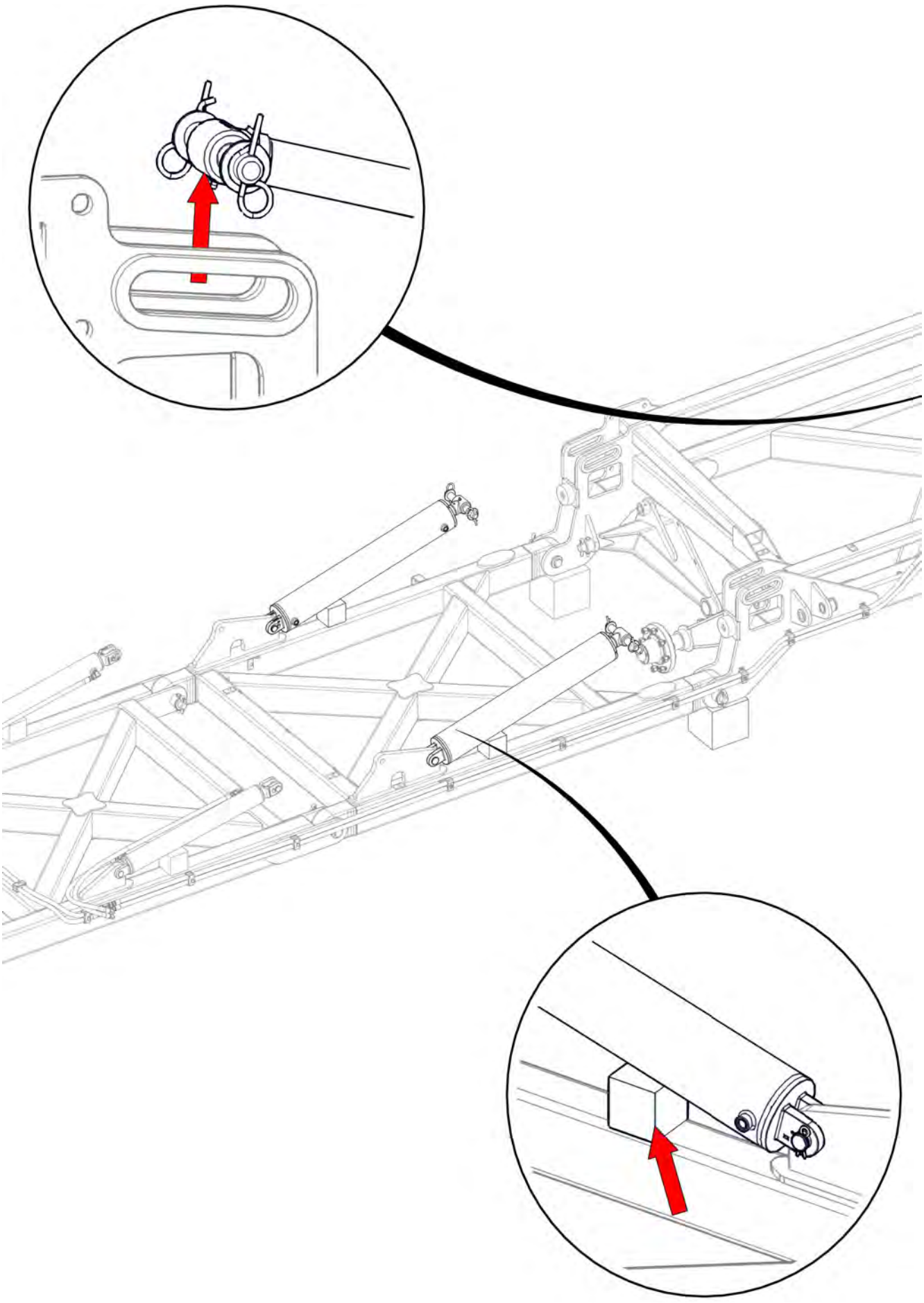

Item No.	Description	Number	Qty
1	3/4" JIC Male 3/4" UN O Ring Male 90° Elbow	0323-S91-1212	4

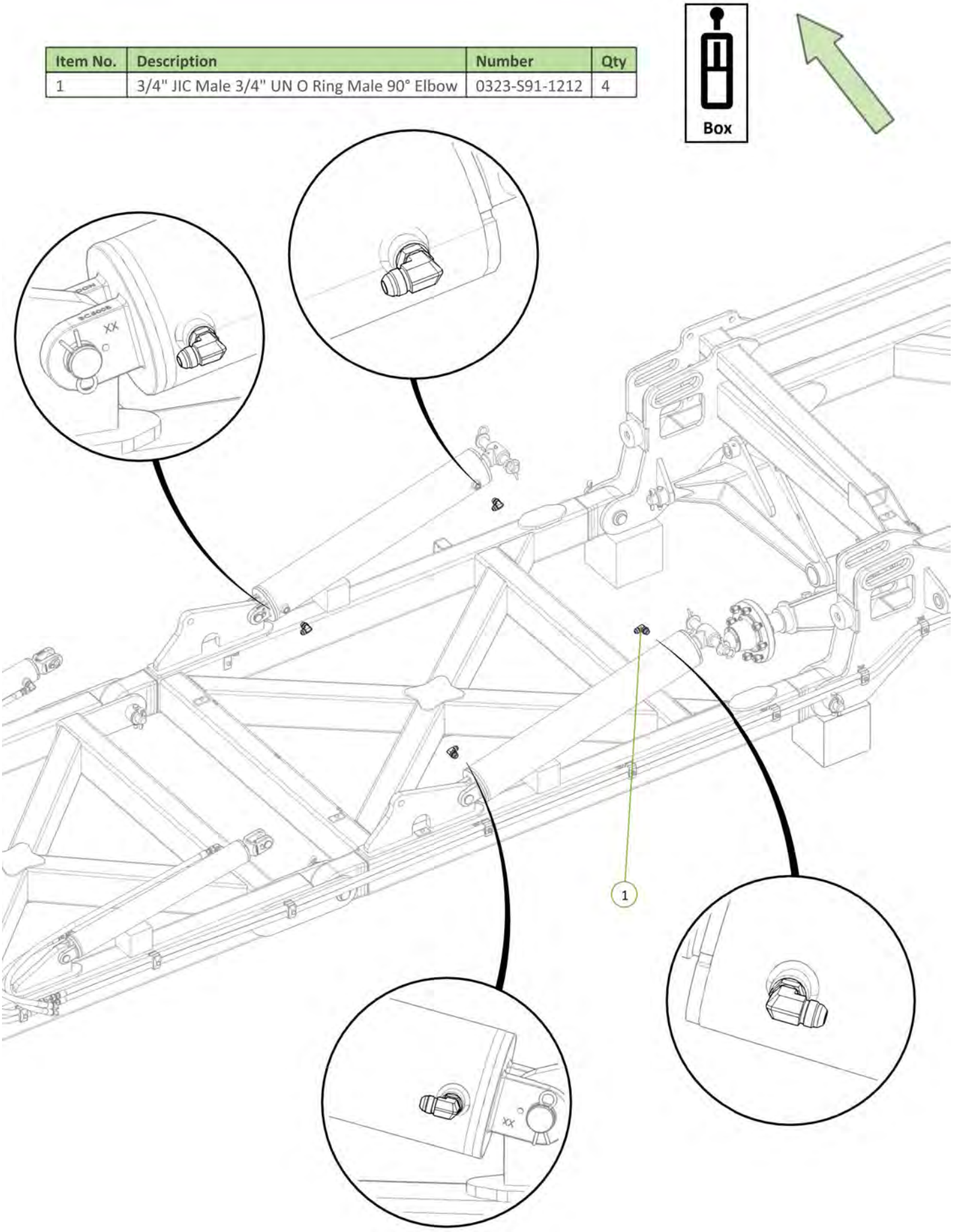

Item No.	Description	Number	Qty
1	LH Sequence Valve CE Port to LH Inner Wing Extend Tee	H46-2-15	1
2	LH Sequence Valve CR Port to LH Inner Wing Retract Tee	H46-2-18	1
3	3/4" JIC Male Tee 3/4" JIC Male Tee 3/4" JIC Male Tee	0324-S19-121212	2

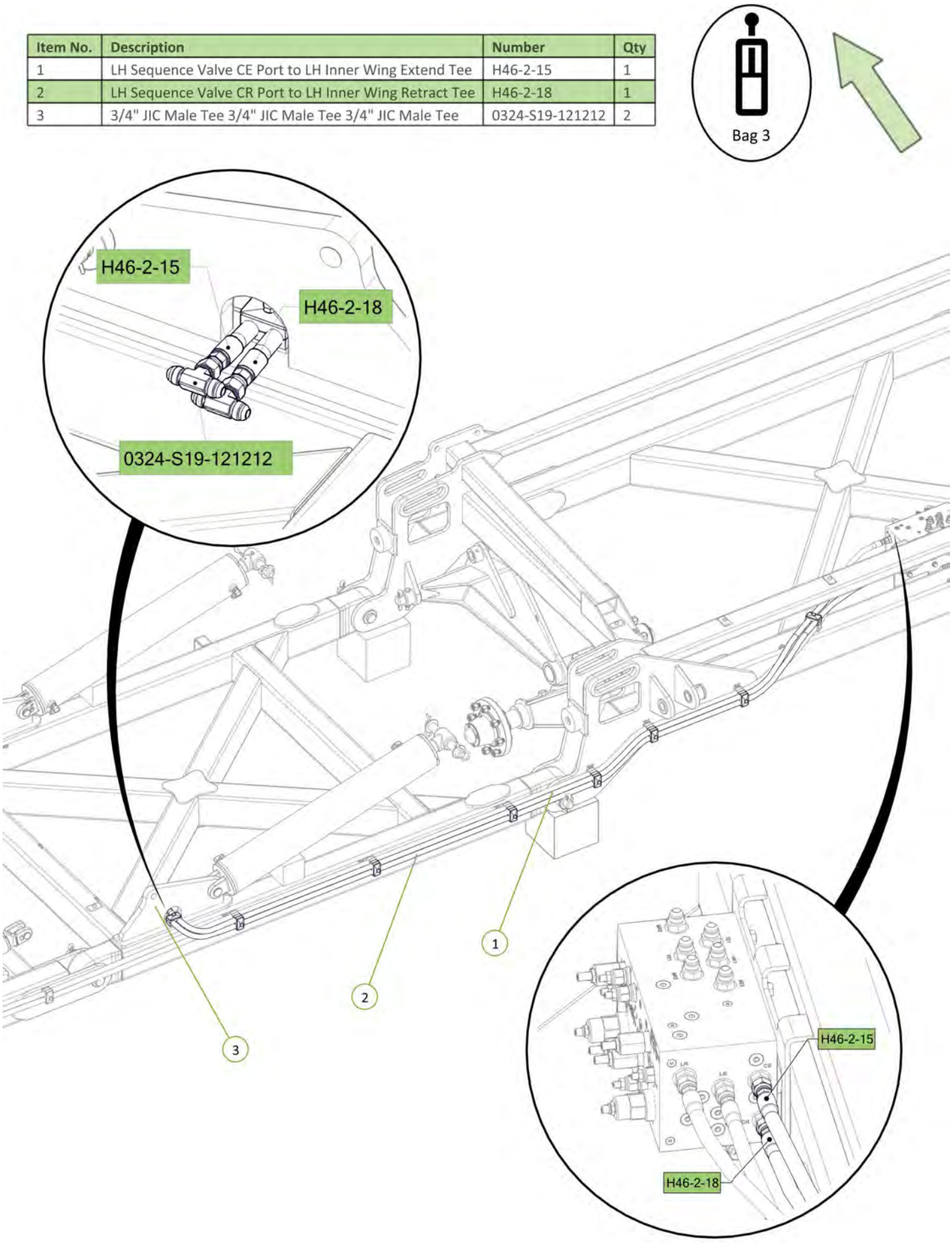

Item No.	Description	Number	Qty
1	LH Inner Wing Extend Tee to LH Inner Wing Rear Cylinder Extend Port	H46-2-16	1
2	LH Inner Wing Retract Tee to LH Inner Wing Rear Cylinder Retract Port	H46-2-19	1

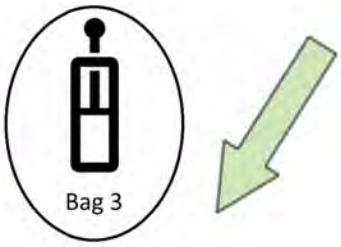

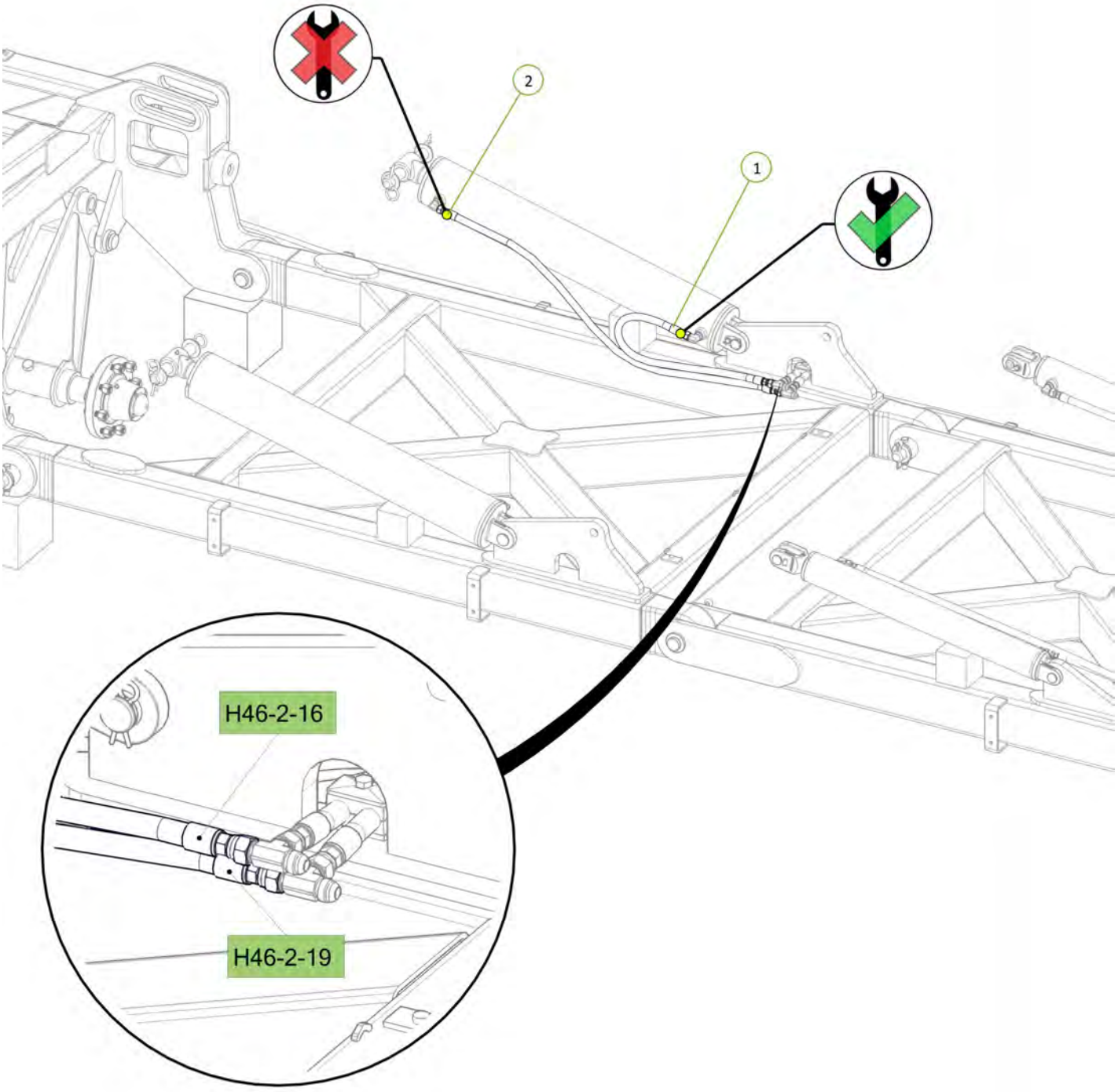

Item No.	Description	Number	Qty
1	LH Inner Wing Extend Tee to LH Inner Wing Front Cylinder Extend Port	H46-2-17	1
2	LH Inner Wing Retract Tee to LH Inner Wing Front Cylinder Retract Port	H46-2-20	1

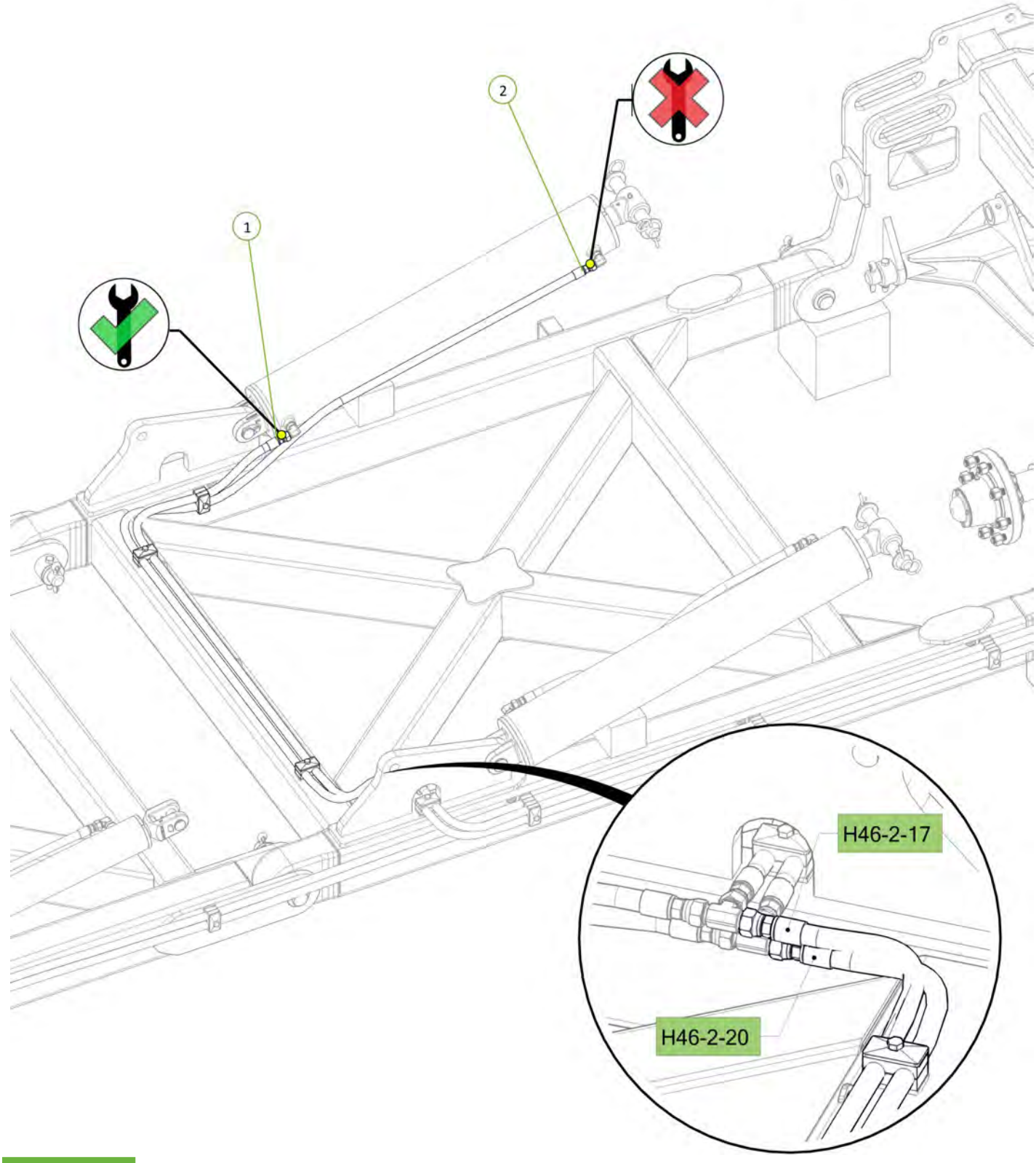

Item No.	Description	Number	Qty
1	3" Bore x 24" Stroke 1.5" Rod Hydraulic Cylinder Side Port	0311-324STSP	2

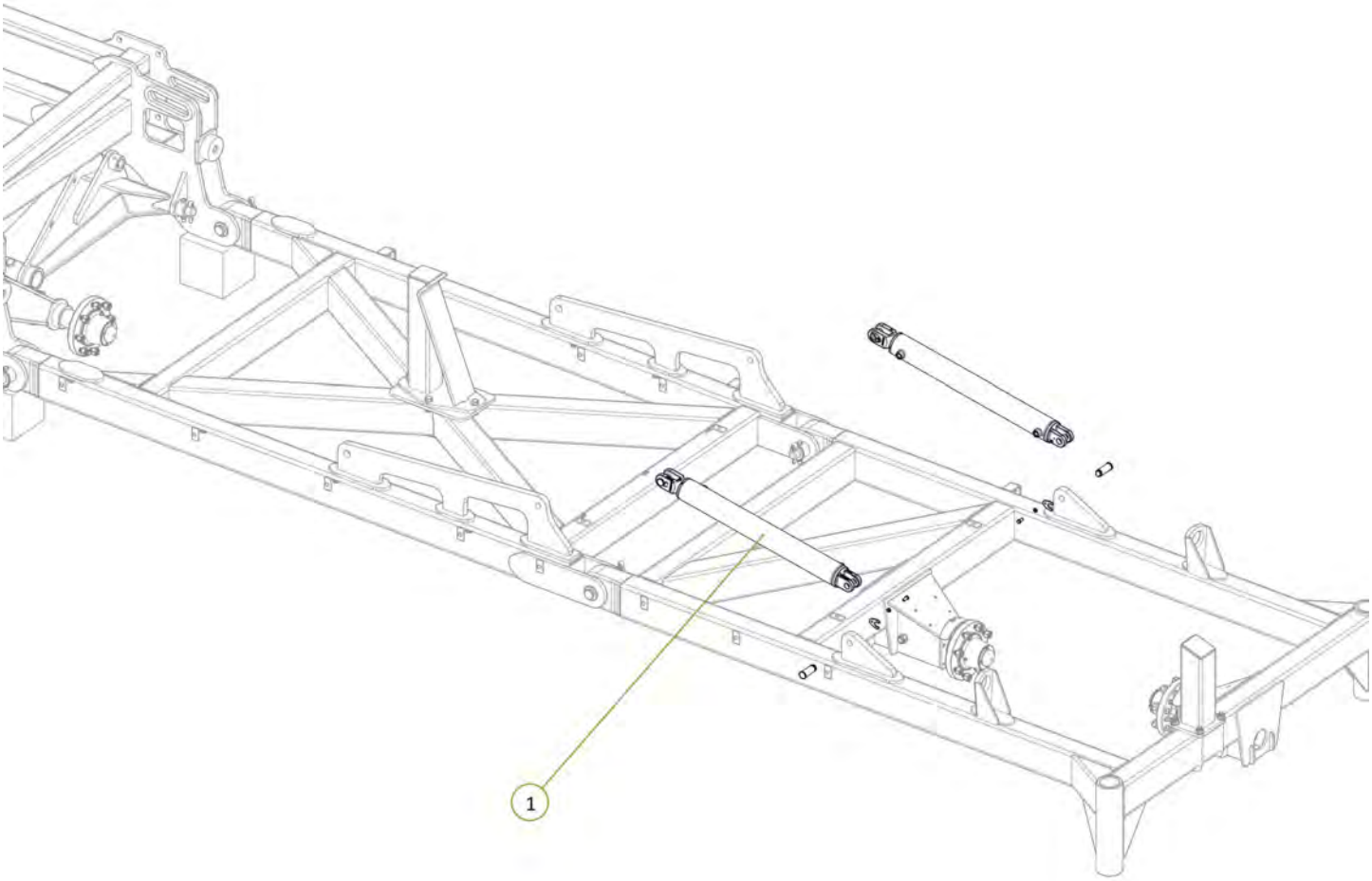

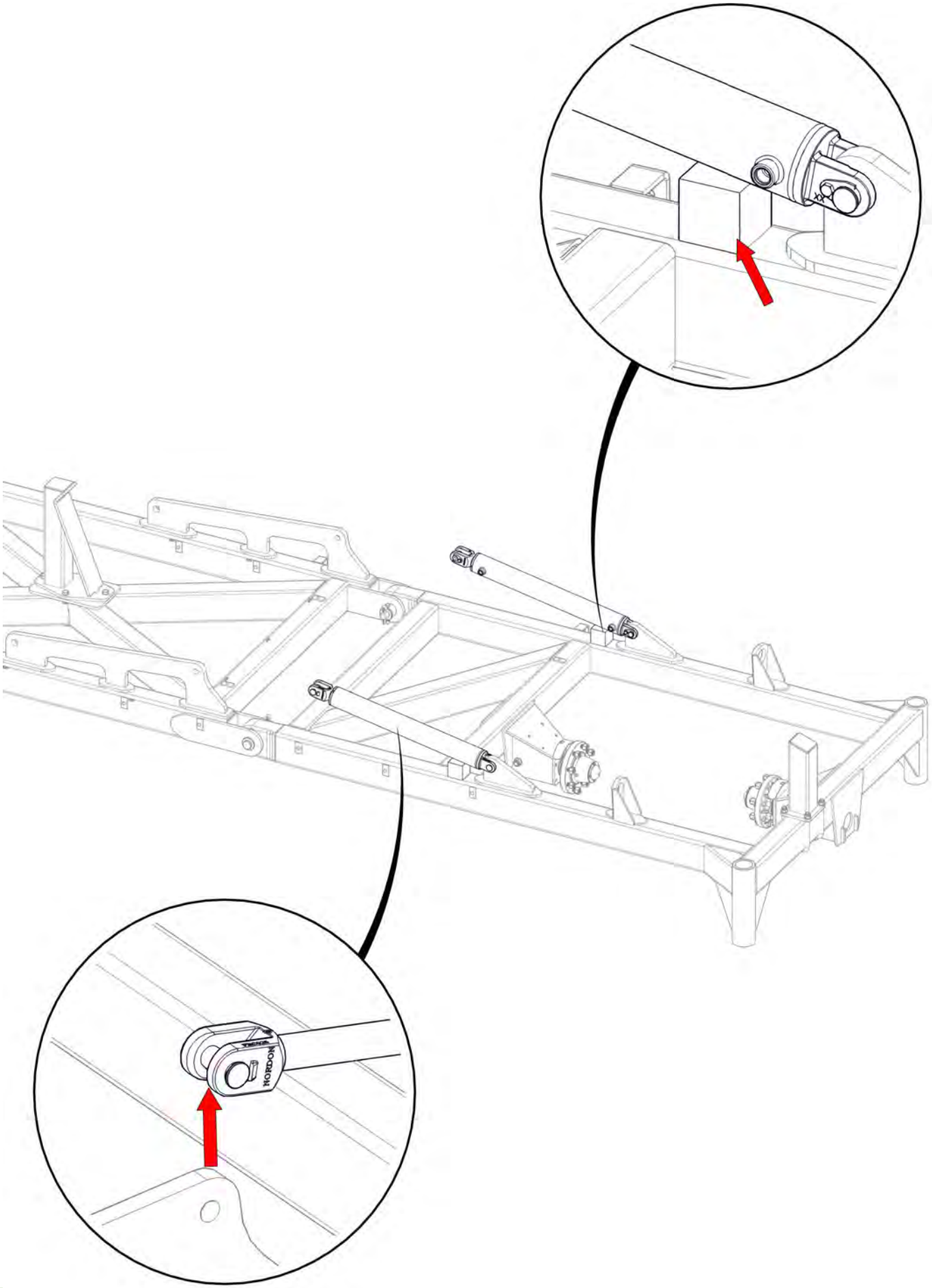

Item No.	Description	Number	Qty
1	3/4" JIC Male 3/4" UN O Ring Male 90° Elbow	0323-S91-1212	4

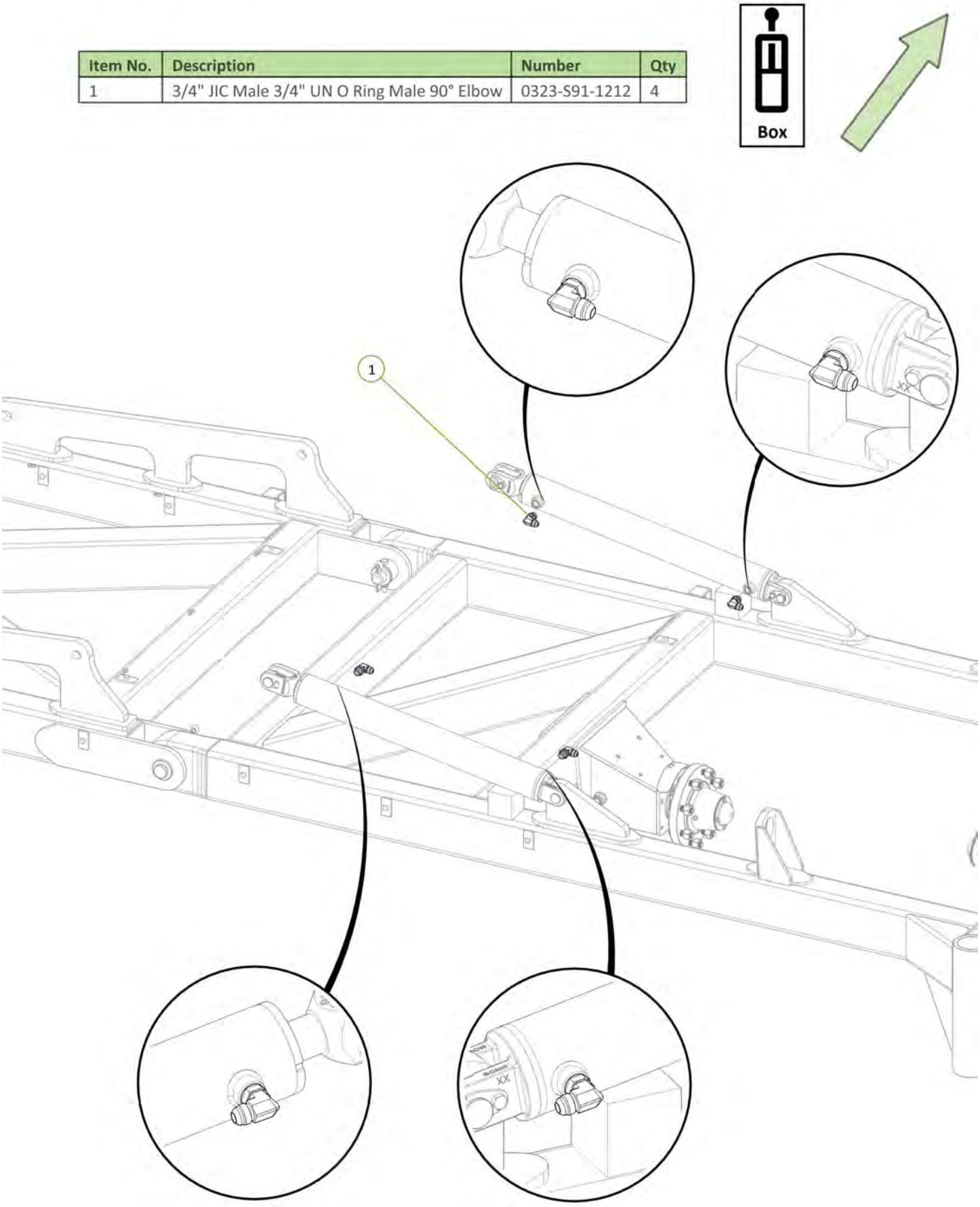

Item No.	Description	Number	Qty
1	RH Sequence Valve RE Port to RH Outer Wing Extend Tee	H46-2-33	1
2	RH Sequence Valve RR Port to RH Outer Wing Retract Tee	H46-2-36	1
3	3/4" JIC Male Tee 3/4" JIC Male Tee 3/4" JIC Male Tee	0324-S19-121212	2

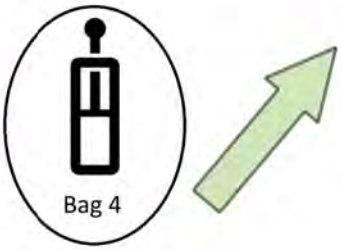

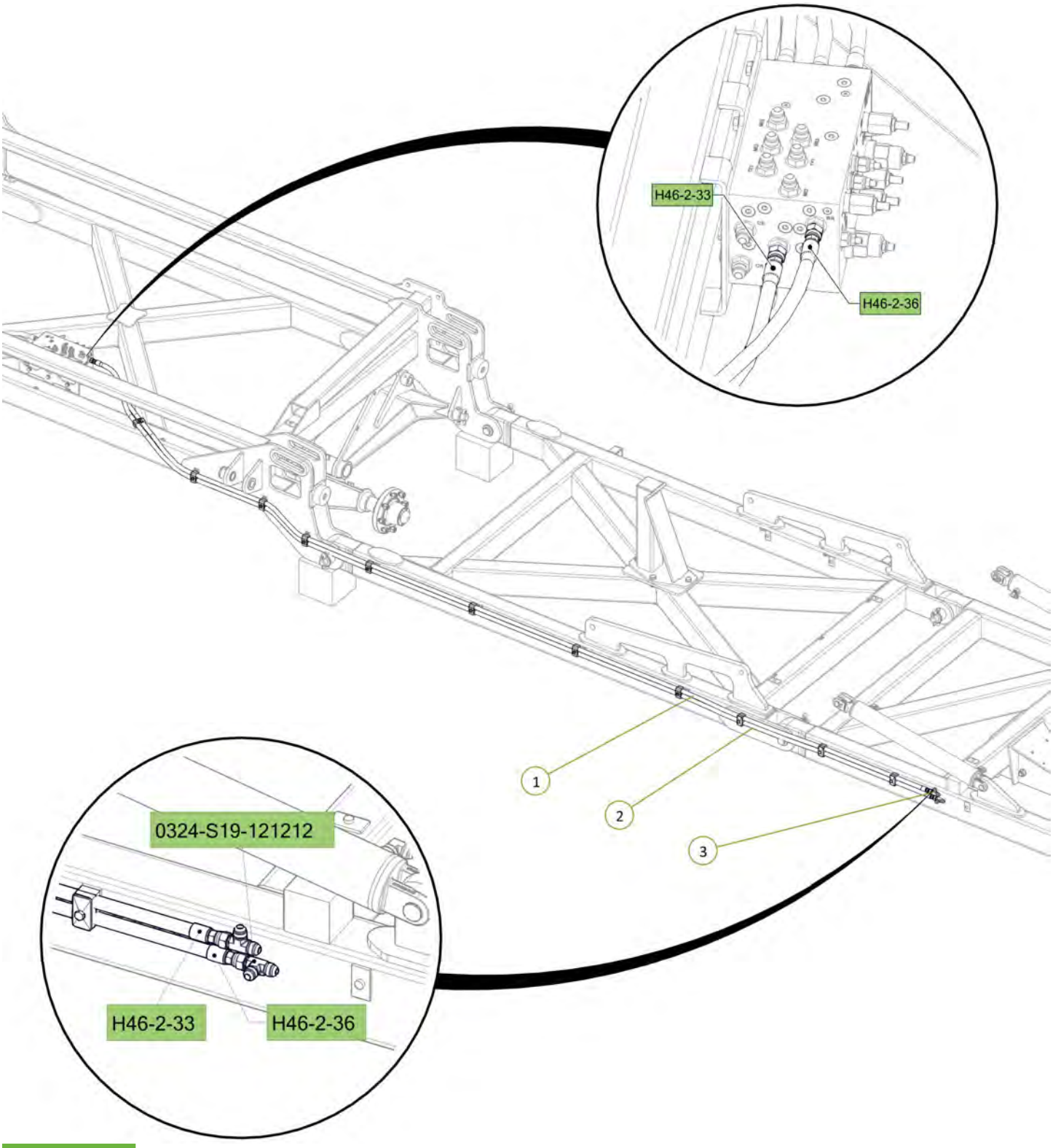

Item No.	Description	Number	Qty
1	RH Outer Wing Extend Tee to RH Inner Wing Rear Cylinder Extend Port	H46-2-34	1
2	RH Outer Wing Retract Tee to RH Inner Wing Rear Cylinder Retract Port	H46-2-37	1

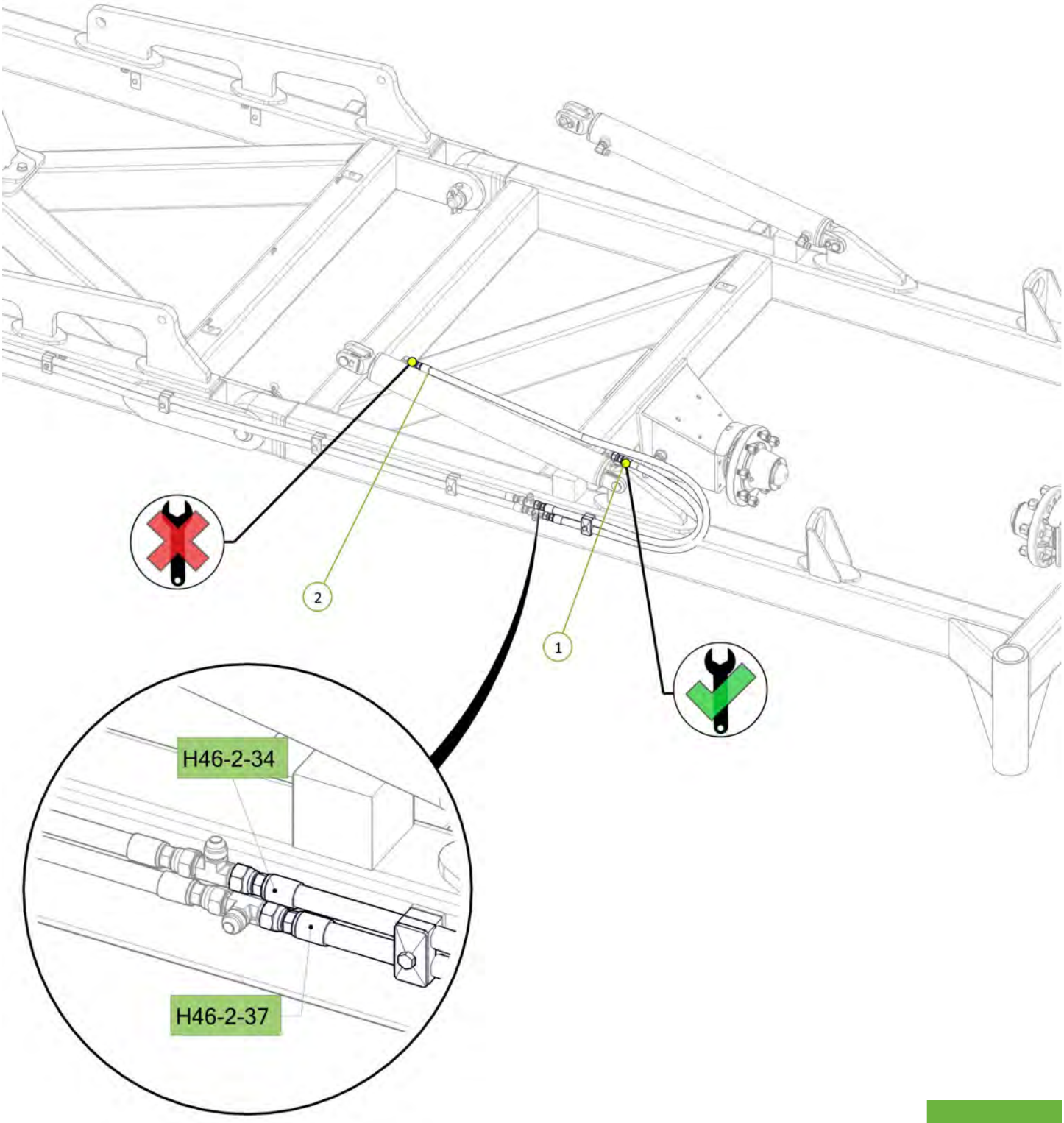

Item No.	Description	Number	Qty
1	RH Outer Wing Extend Tee to RH Inner Wing Front Cylinder Extend Port	H46-2-35	1
2	RH Outer Wing Retract Tee to RH Inner Wing Front Cylinder Retract Port	H46-2-38	1
3	3/4" JIC Male 3/4" JIC Female Swivel 90° Elbow	0323-S15-1212	1

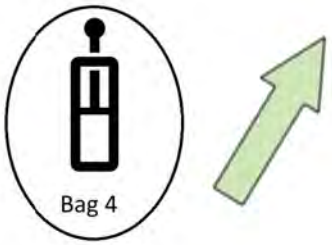

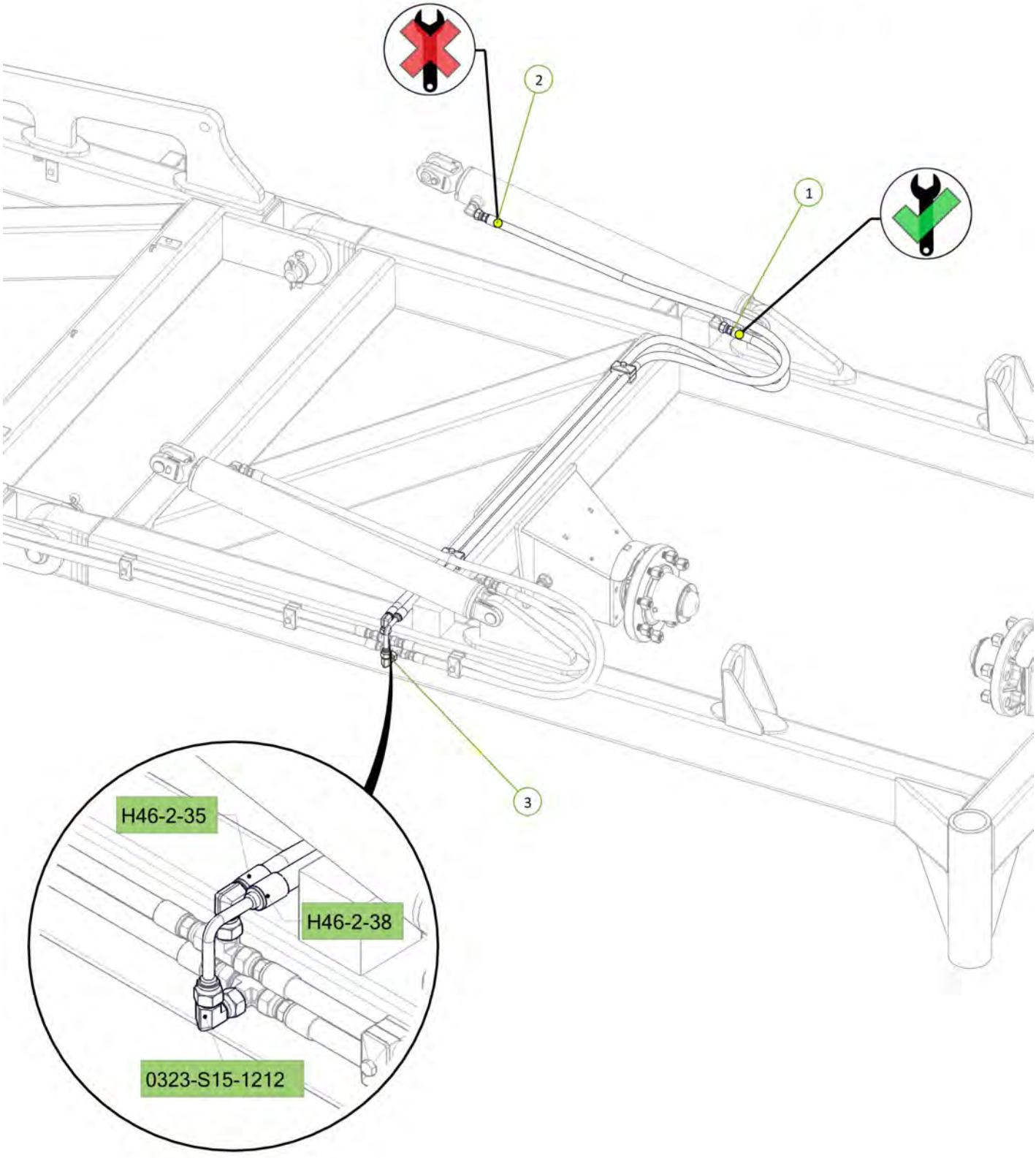

Item No.	Description	Number	Qty
1	5" Bore 30" Stroke 3 1/8" S/Tube 2" Rod Hydraulic Cylinder	0311-530STSP	2

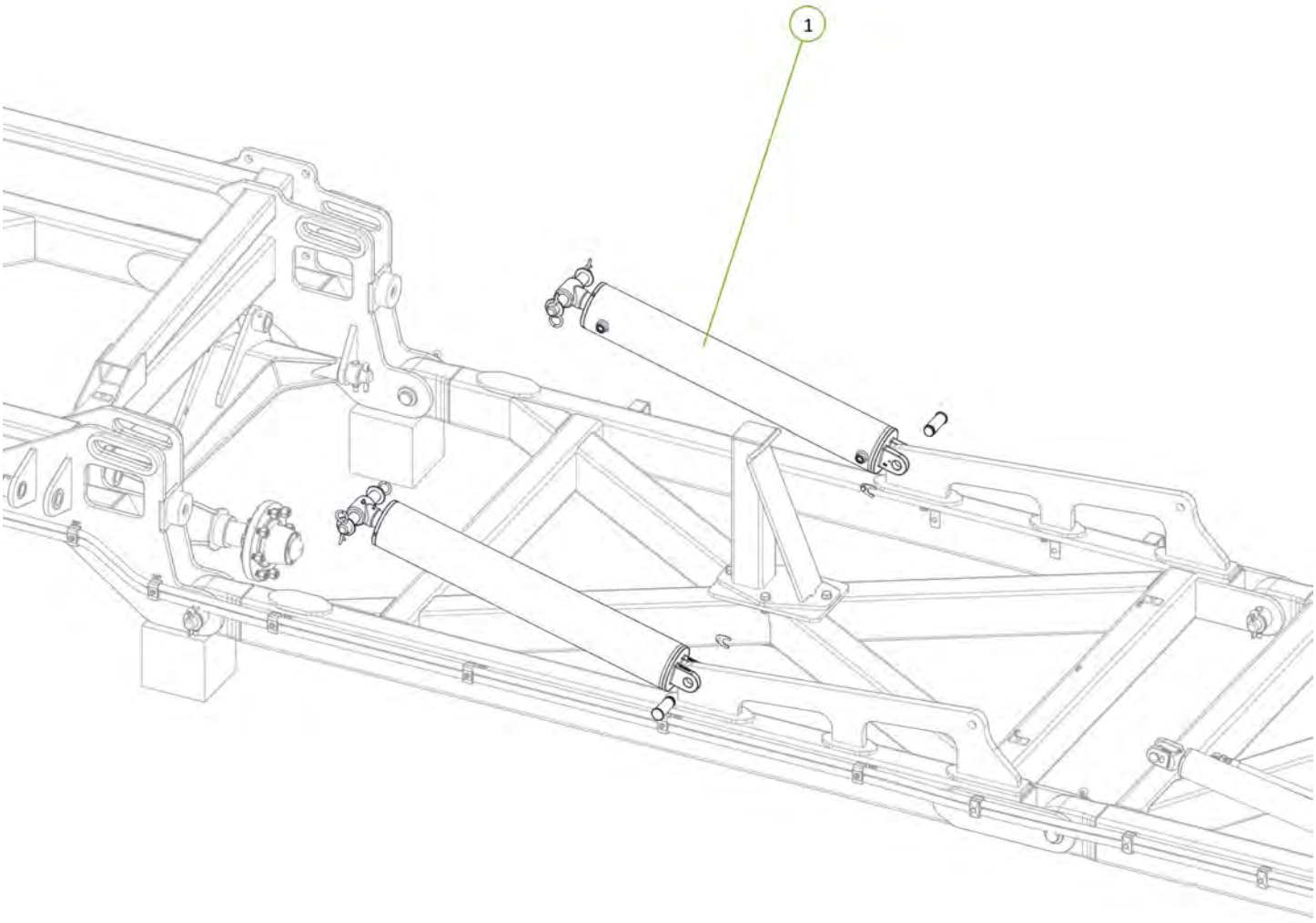

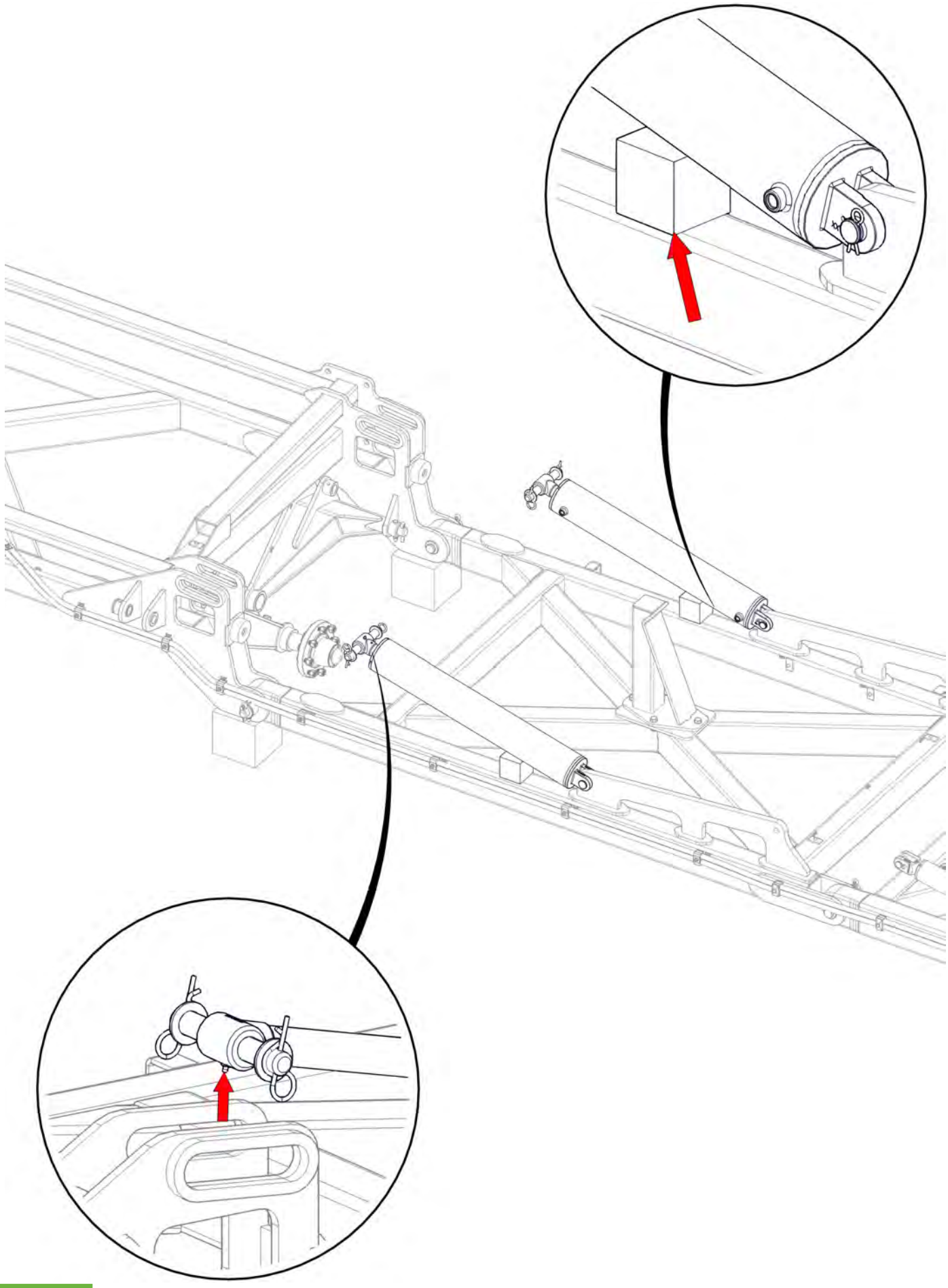

Item No.	Description	Number	Qty
1	3/4" JIC Male 3/4" UN O Ring Male 90° Elbow	0323-S91-1212	4

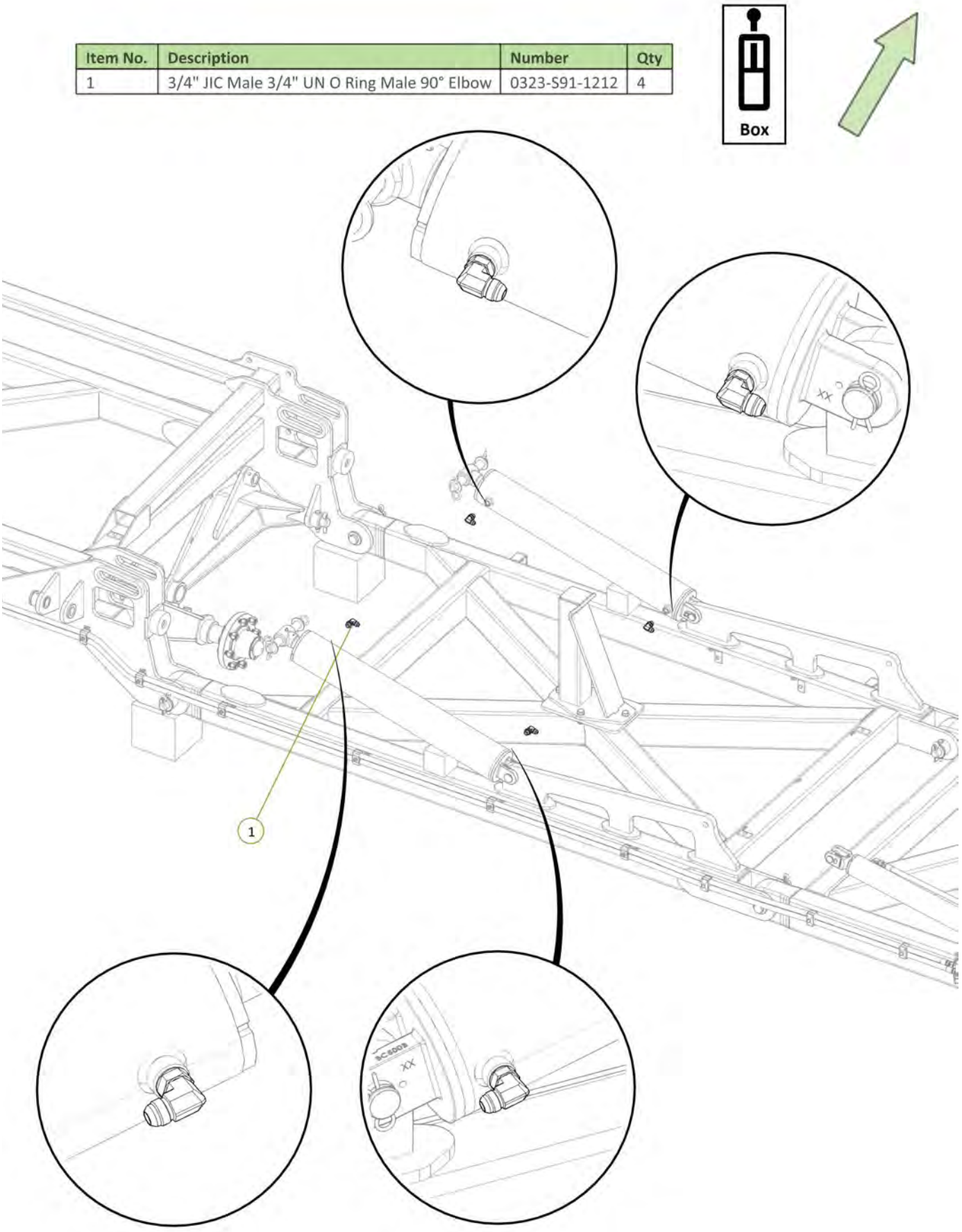

Item No.	Description	Number	Qty
1	RH Sequence Valve CE Port to RH Inner Wing Extend Tee	H46-2-27	1
2	RH Sequence Valve CR Port to RH Inner Wing Retract Tee	H46-2-30	1
3	3/4" JIC Male Tee 3/4" JIC Male Tee 3/4" JIC Male Tee	0324-S19-121212	2

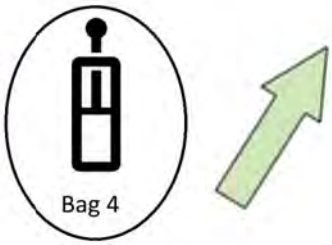

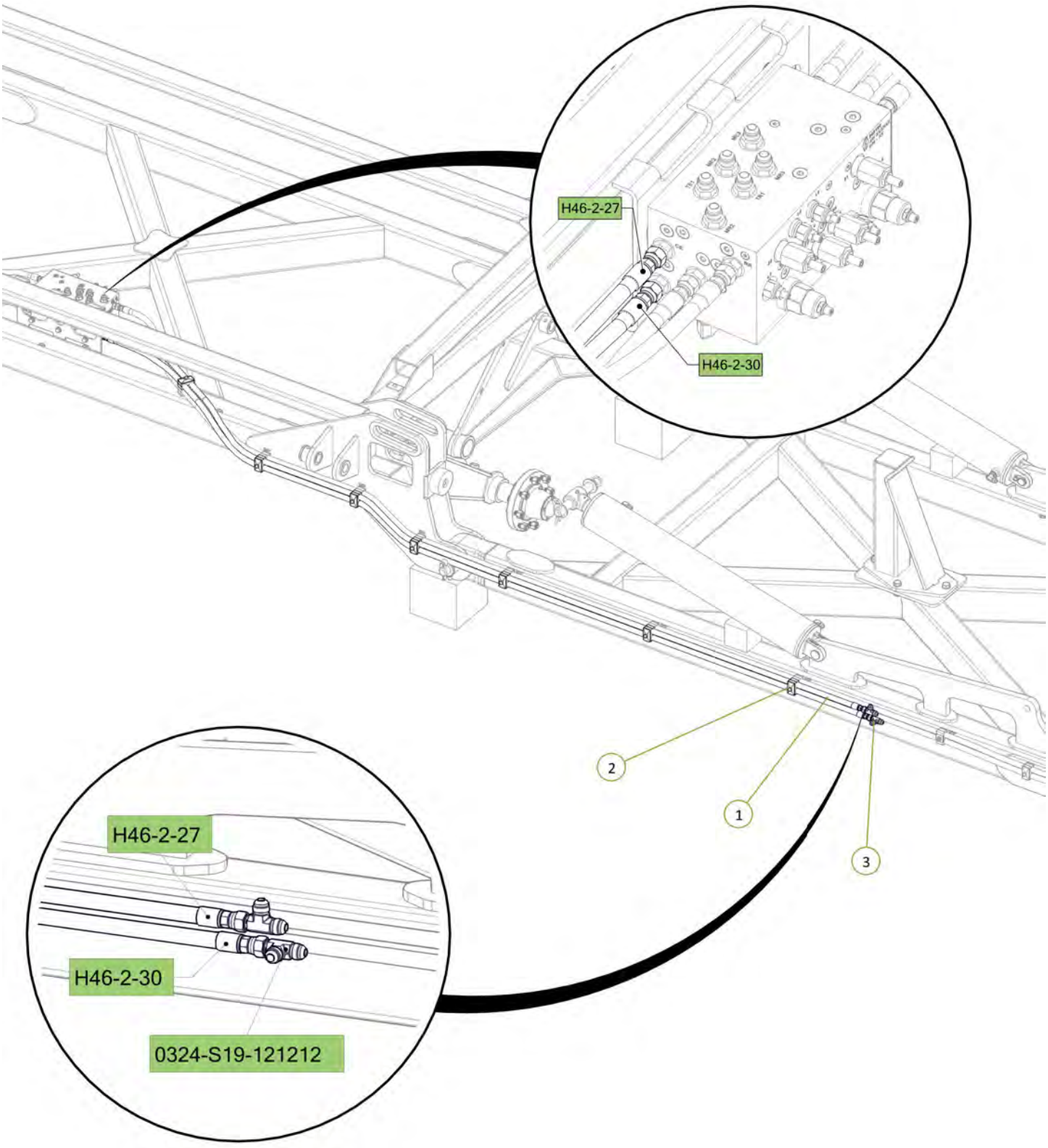

Item No.	Description	Number	Qty
1	RH Inner Wing Extend Tee to RH Inner Wing Front Cylinder Extend Port	H46-2-29	1
2	RH Inner Wing Retract Tee to RH Inner Wing Front Cylinder Retract Port	H46-2-32	1

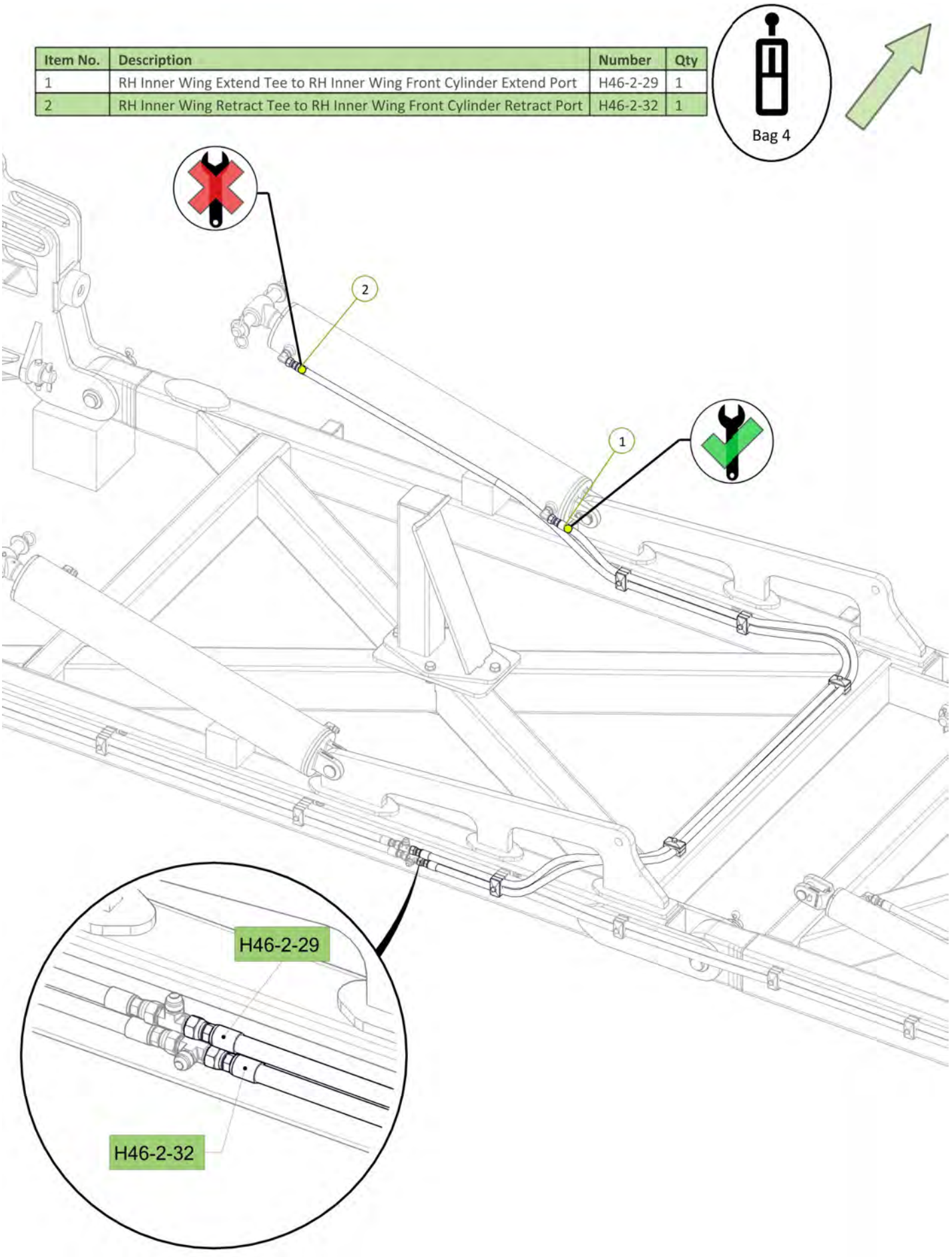

Item No.	Description	Number	Qty
1	RH Inner Wing Extend Tee to RH Inner Wing Rear Cylinder Extend Port	H46-2-28	1
2	RH Inner Wing Retract Tee to RH Inner Wing Rear Cylinder Retract Port	H46-2-31	1
3	3/4" JIC Male 3/4" JIC Female Swivel 90° Elbow	0323-S15-1212	1

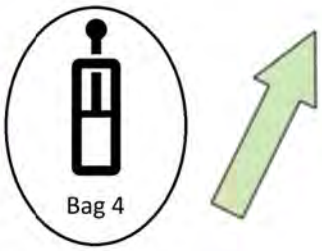

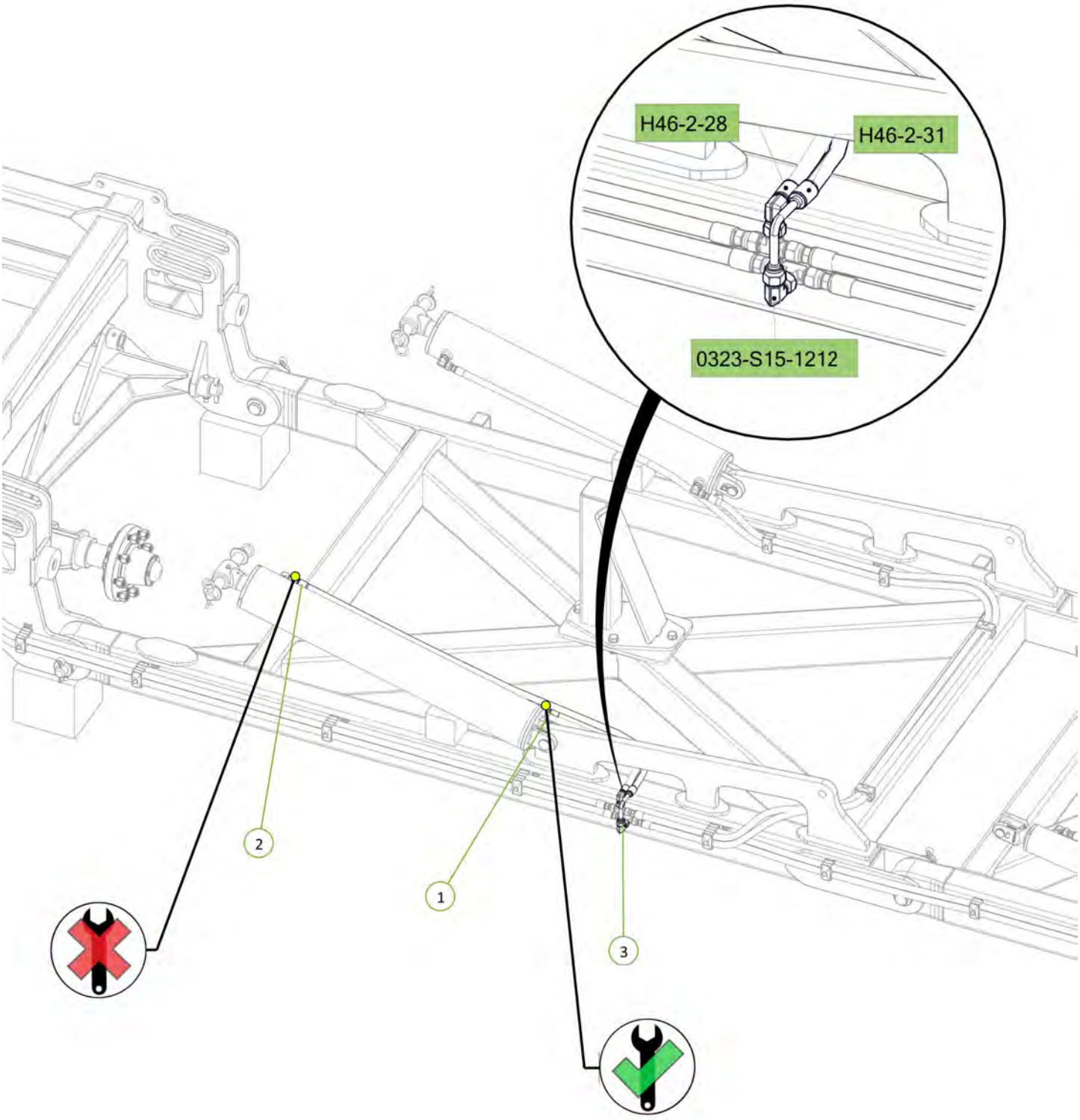

Item No.	Description	Number	Qty
1	Tractor to Sequence Valve EXT1 Port Fitted With Green EXT Decal	H46-2-01-GE-EXT1	1
2	Tractor to Sequence Valve RCT1 Port Fitted With Green RET Decal	H46-2-02-GR-RCT1	1

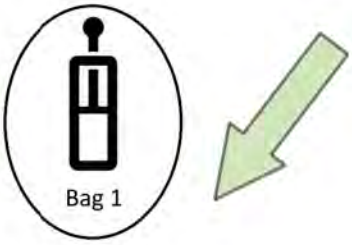

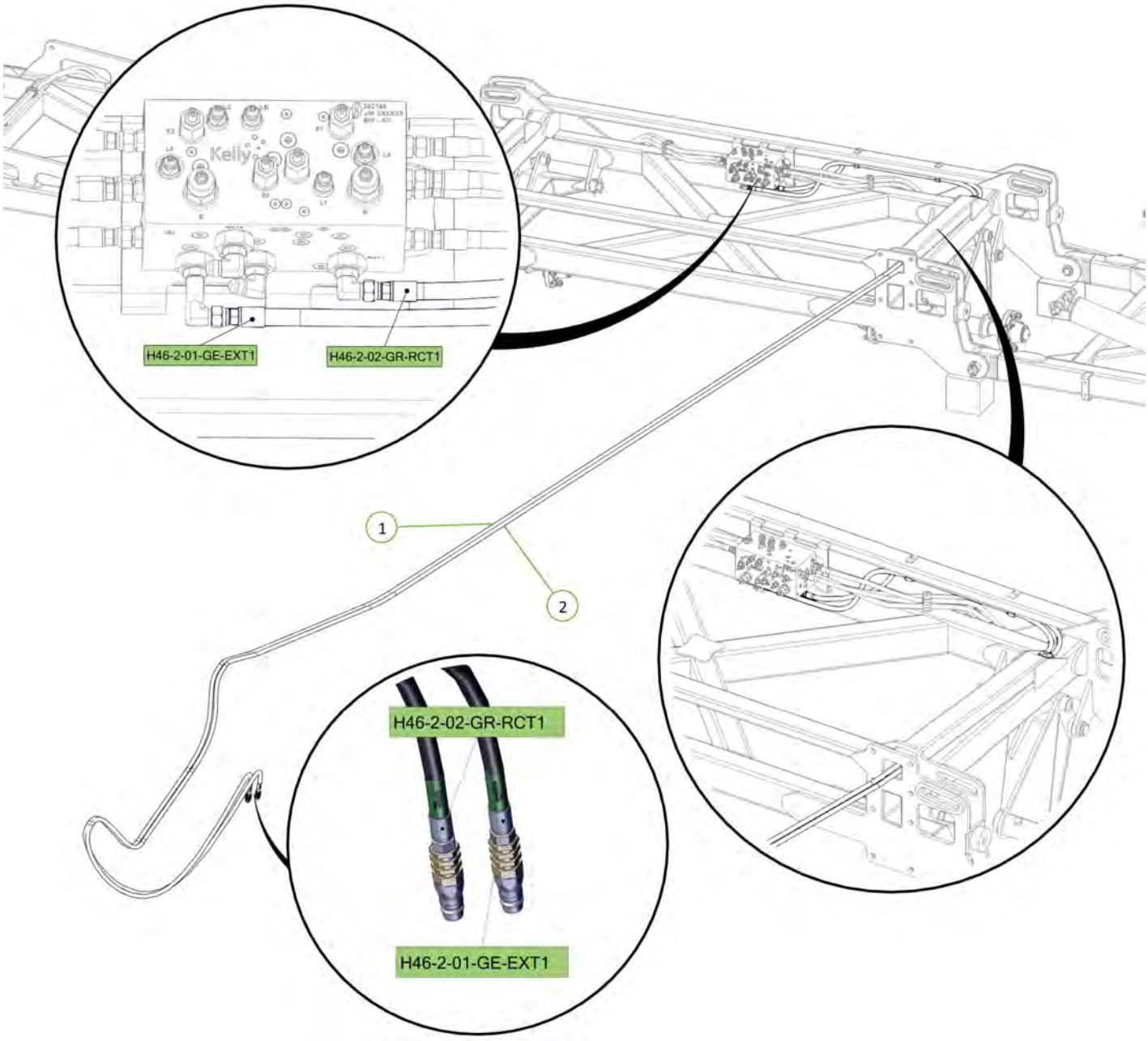

All retract hose fittings loose to allow air to escape ○

All cylinders chocked up to prevent clash during extend ○

Signed_____ Date__/__/__
Unit Serial Number_____

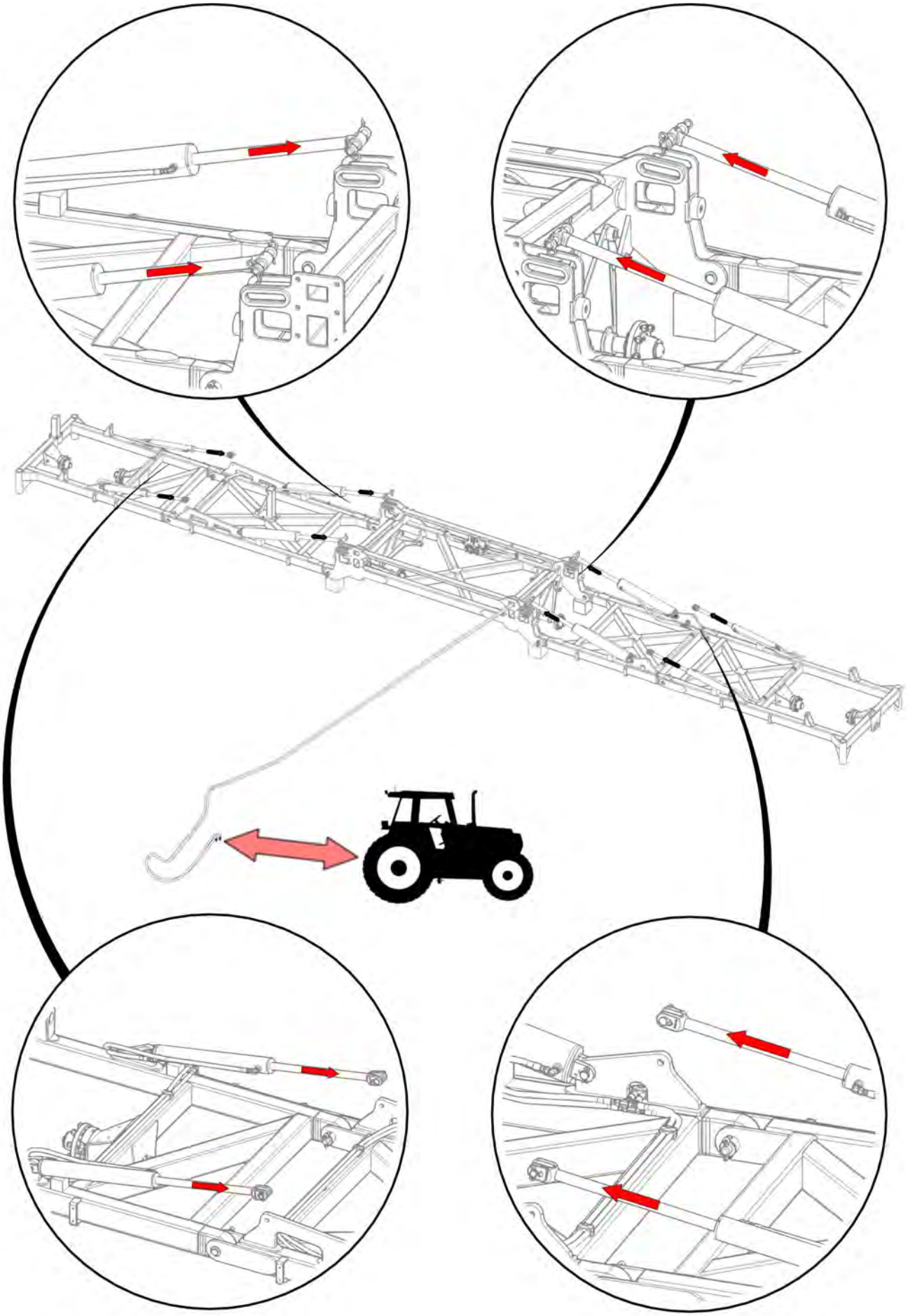

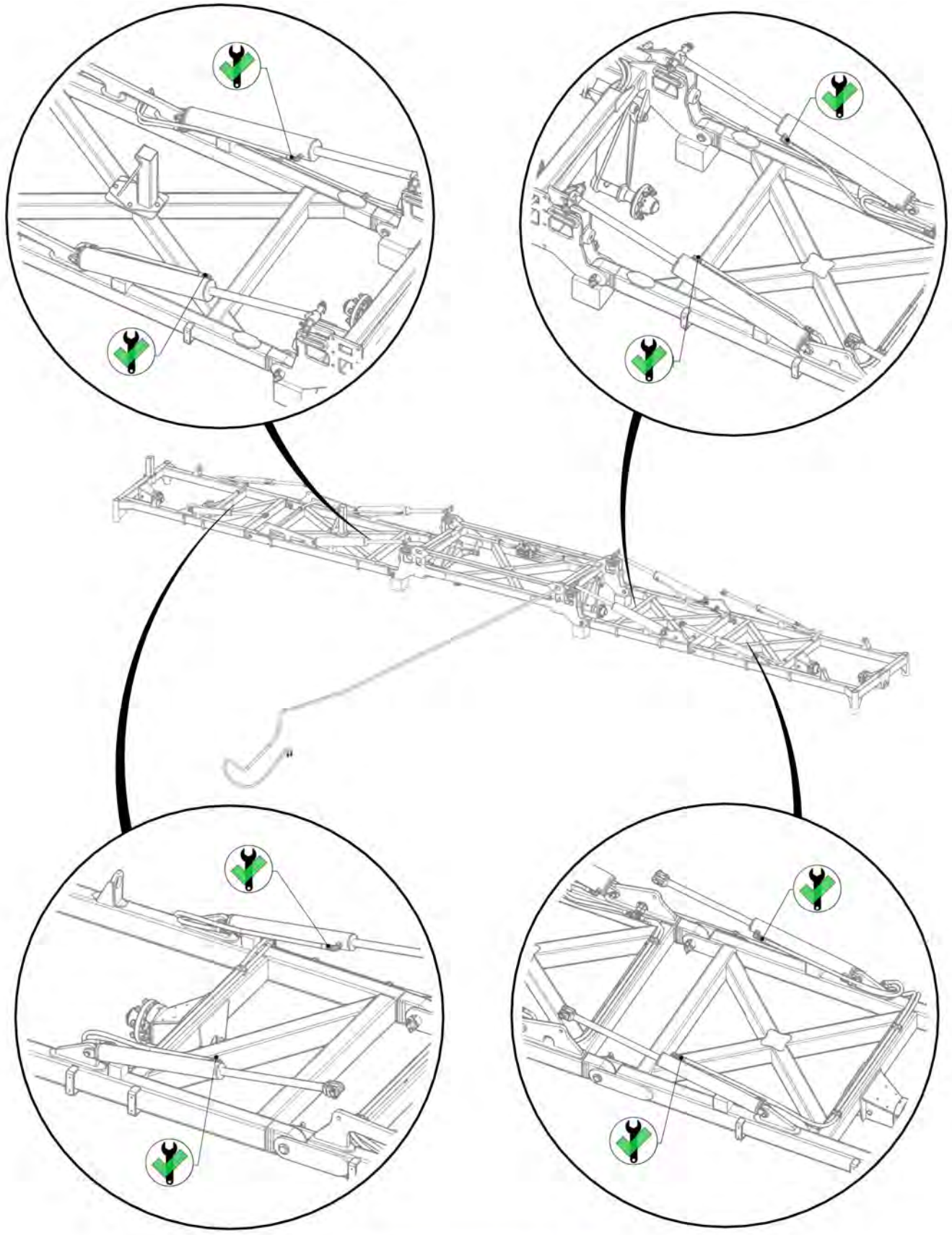

Retract fittings tightened ○

Signed_____ Date__/__/__
Unit Serial Number_____

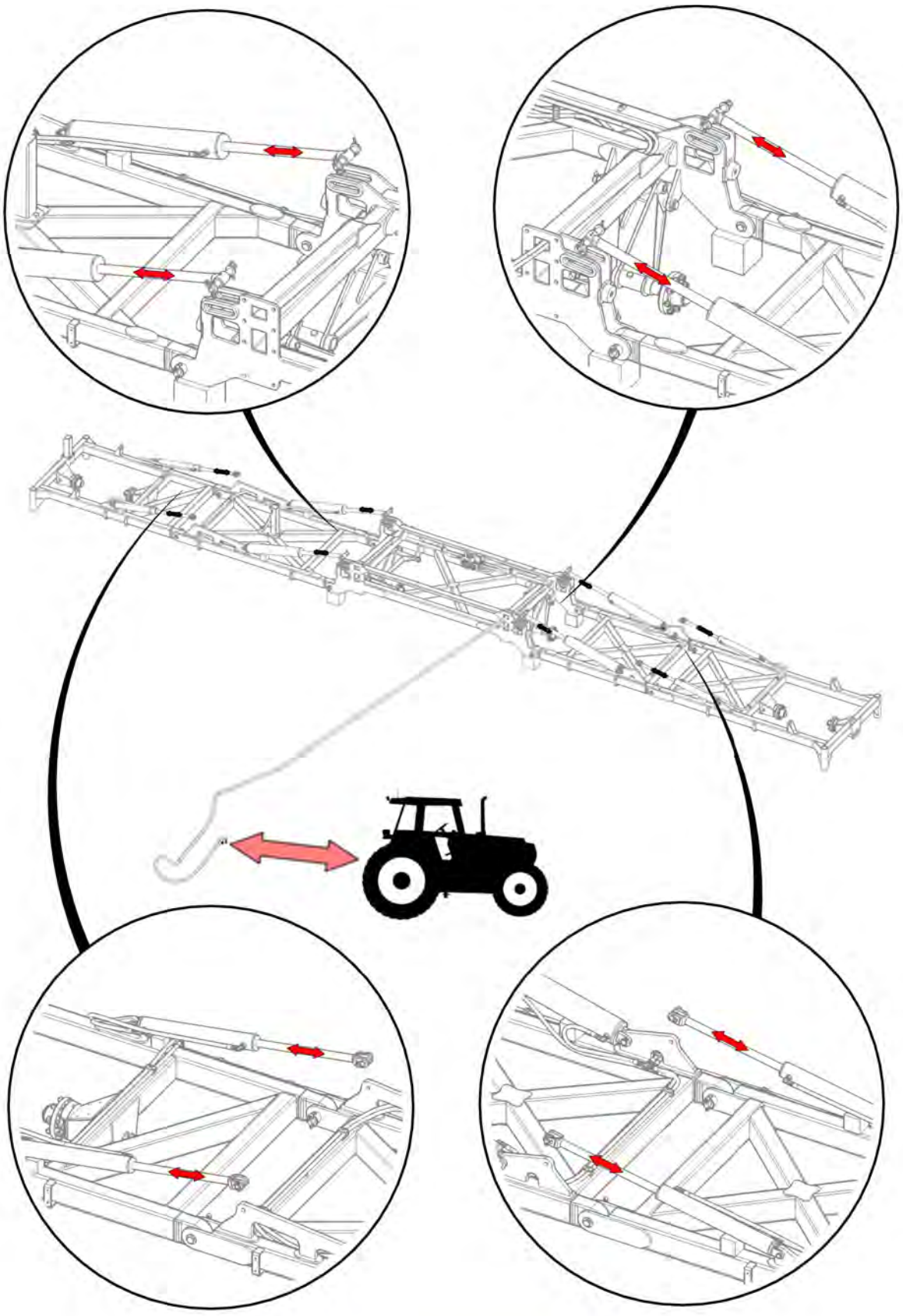

Cylinders Cycled to expel air from system ○

Signed_____ Date__/__/__
Unit Serial Number_____

Item No.	Description	Number	Qty
1	Long Cylinder Pin Bearing Bush	1201-19	8

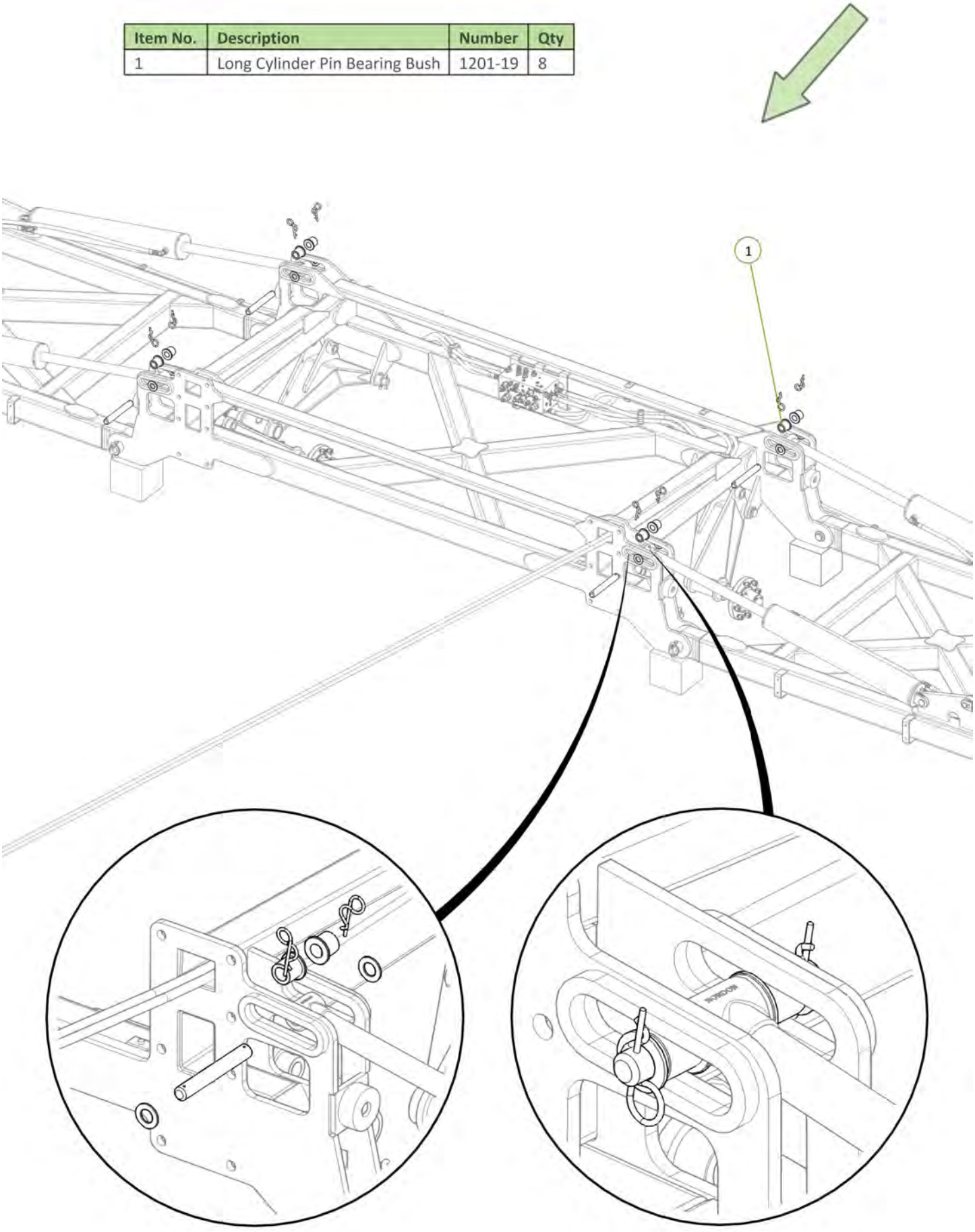

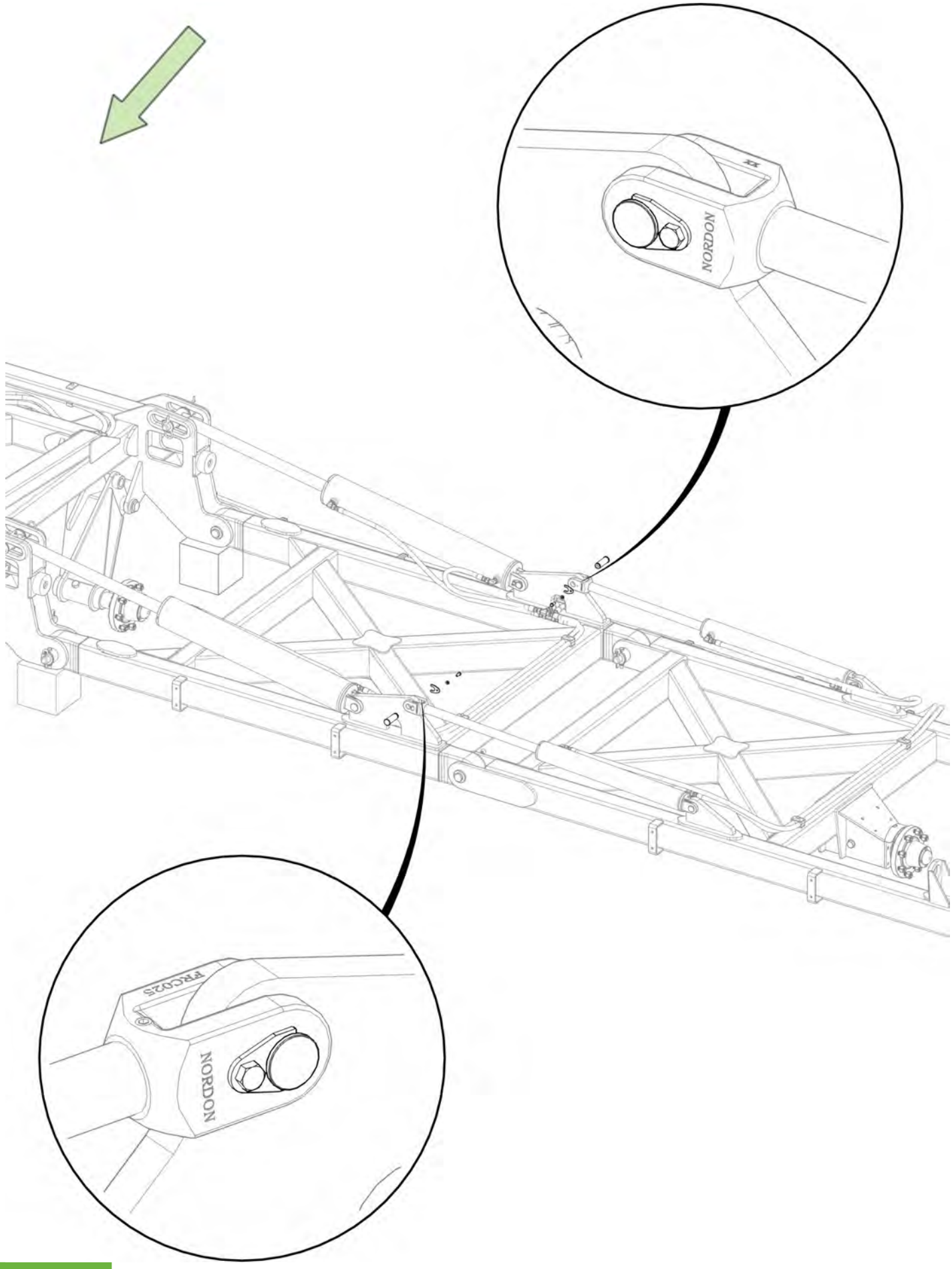
NORDON
FRC025
NORDON

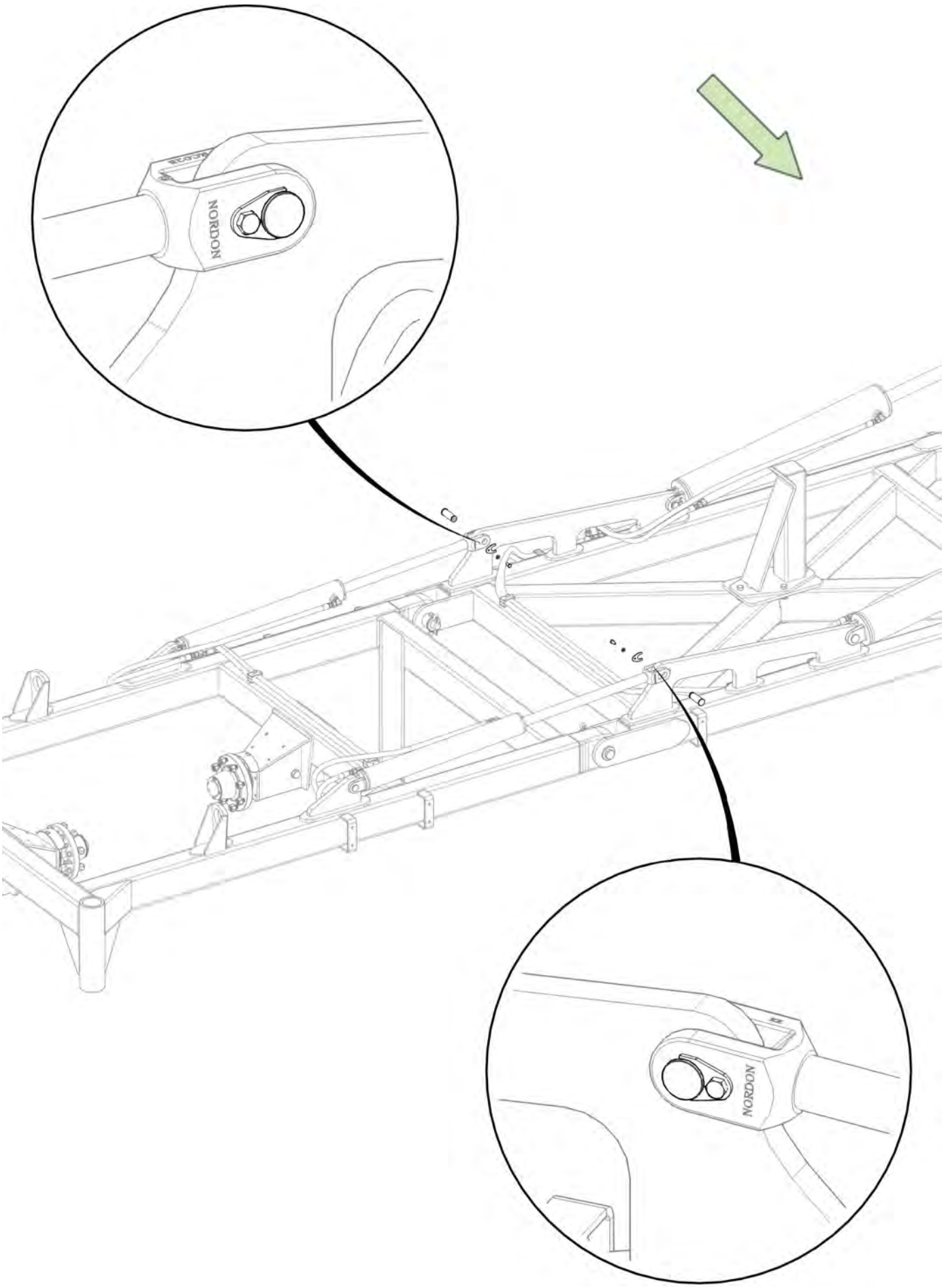
NORDON
NORDON

Item No.	Description	Number	Qty
1	Super Single LH Drop Leg No Clevis	0810-24SF	1
2	Super Single RH Drop Leg No Clevis	0810-25SF	1
3	LH Chain Adjusting Lug	0810-26	1
4	RH Chain Adjusting Lug	0810-27	1
5	M24 x 140 grade 8.8 zp Bolt	0211-24140	2
6	Nyloc Nut M24	0221-NYL24	2

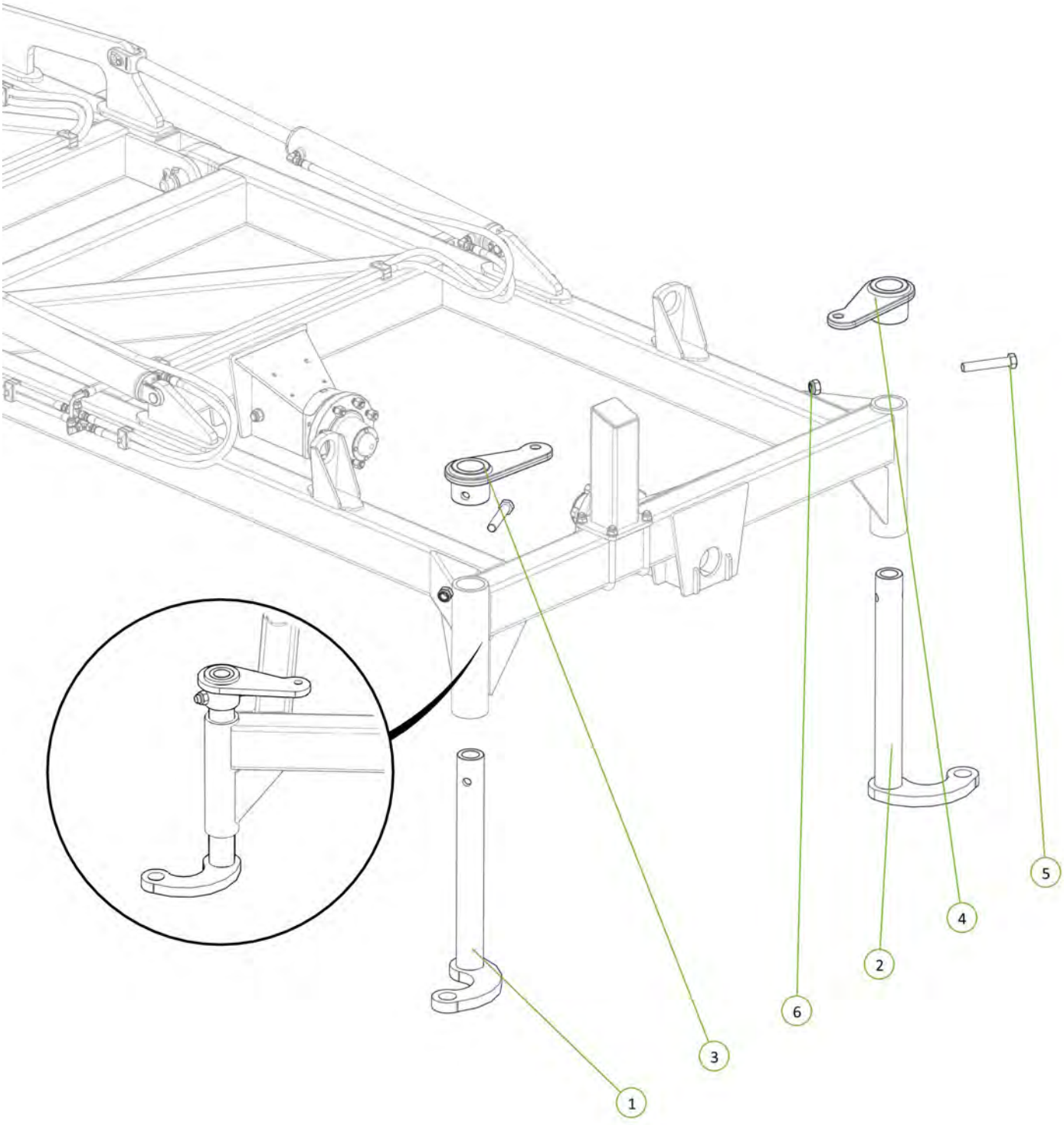

Item No.	Description	Number	Qty
1	Cast 25mm Spacing	0801-CS25	24
2	M10 x 30 grade 8.8 ZP Bolt	0211-1030	24
3	Nyloc Nut M10	0221-NYL10	24

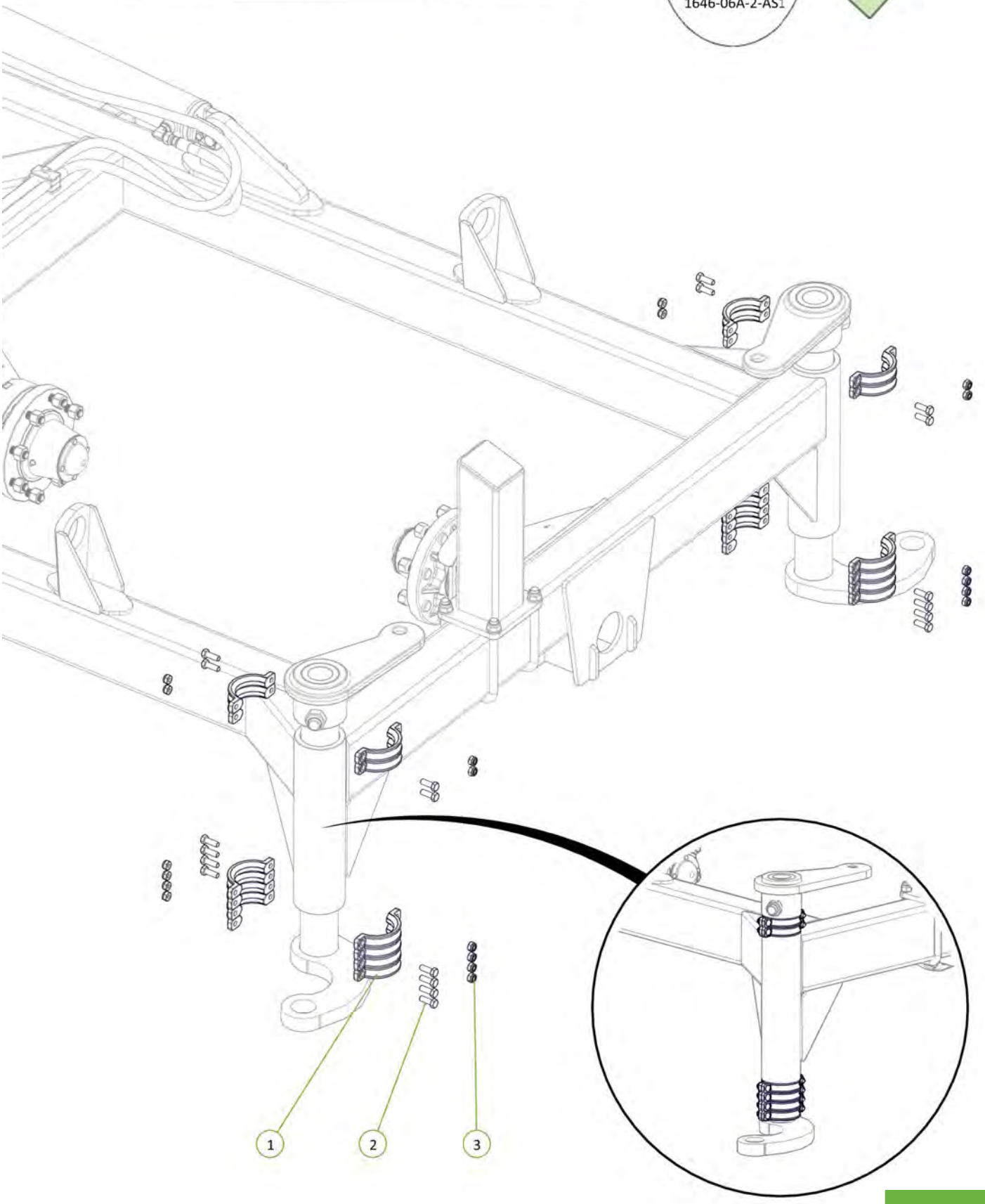

Item No.	Description	Number	Qty
1	Chain Tension Adjustor	0802-PCHTA	2
2	Heavy Duty Coil Spring 24mm	0801-K2455350	2
3	Tensioner Cup - Male	0801-KE0805-3	2
4	Female Spring Locator	0801-KE0805-4	2
5	Washer High Tensile 1 1/4"	0232-HT11-4	2

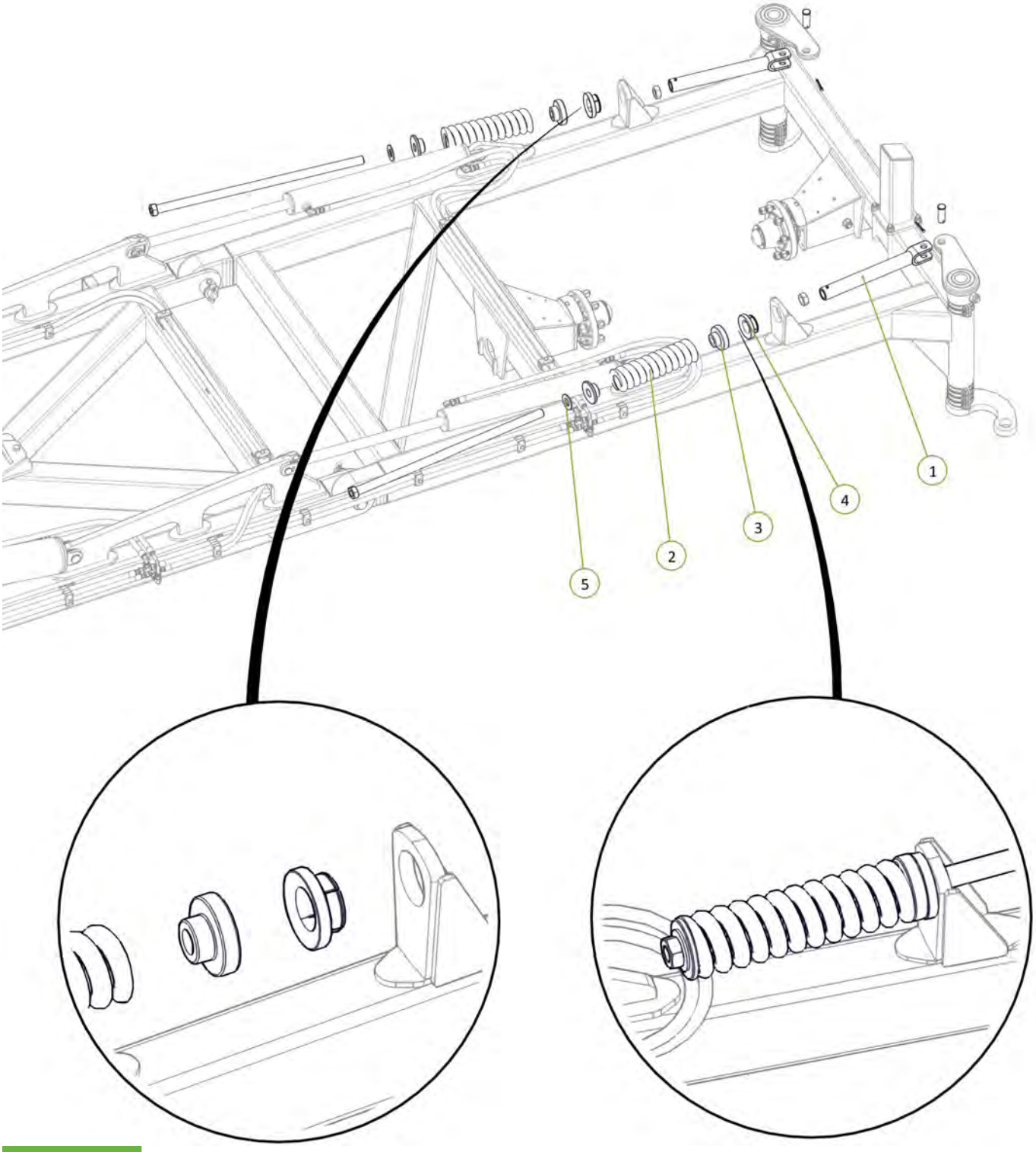

Item No.	Description	Number	Qty
1	Super Single LH Drop Leg No Clevis	0810-24SF	1
2	Super Single RH Drop Leg No Clevis	0810-25SF	1
3	LH Chain Adjusting Lug	0810-26	1
4	RH Chain Adjusting Lug	0810-27	1
5	M24 x 140 grade 8.8 zp Bolt	0211-24140	2
6	Nyloc Nut M24	0221-NYL24	2

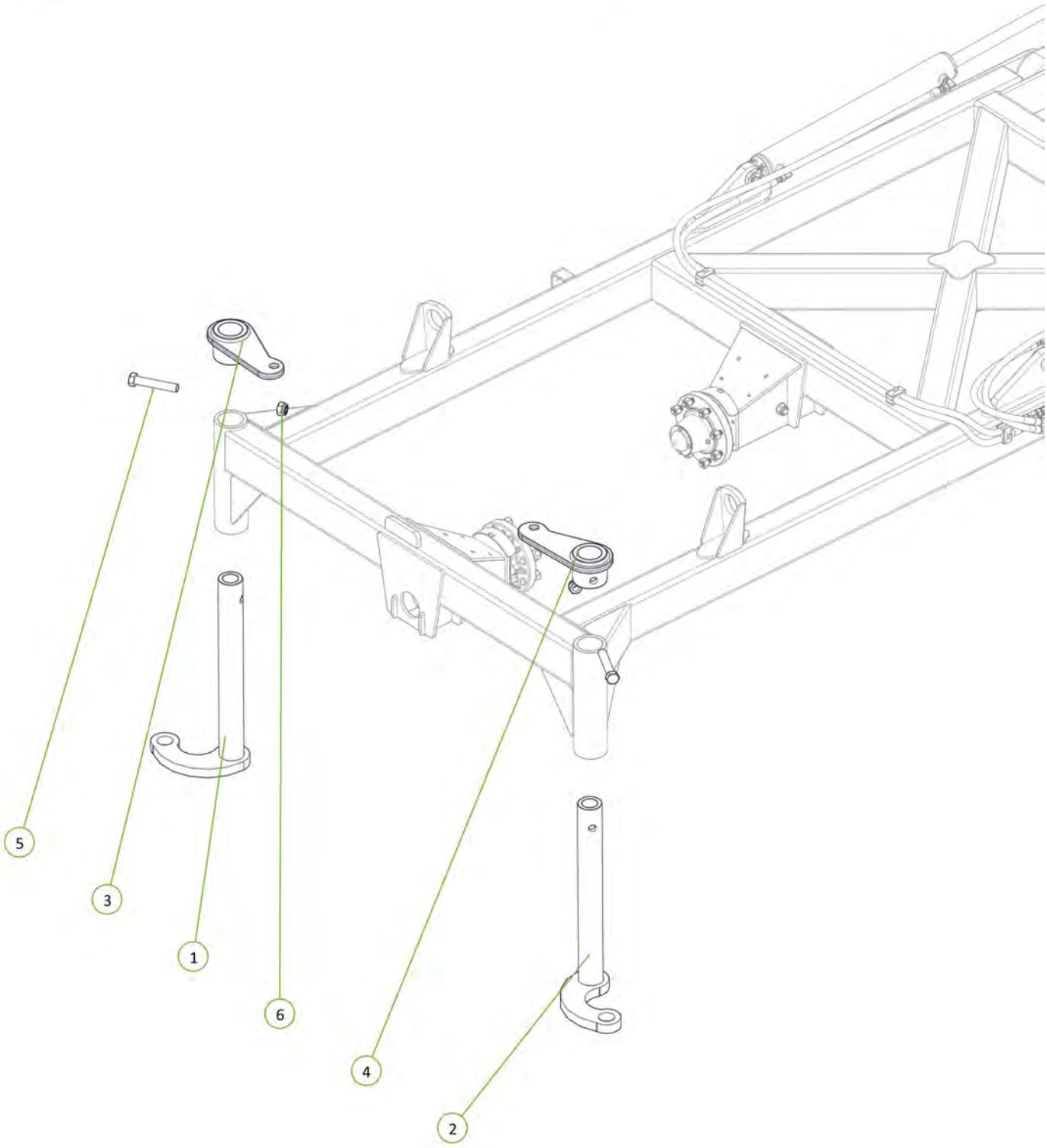

Item No.	Description	Number	Qty
1	Cast 25mm Spacing	0801-CS25	24
2	M10 x 30 grade 8.8 ZP Bolt	0211-1030	24
3	Nyloc Nut M10	0221-NYL10	24

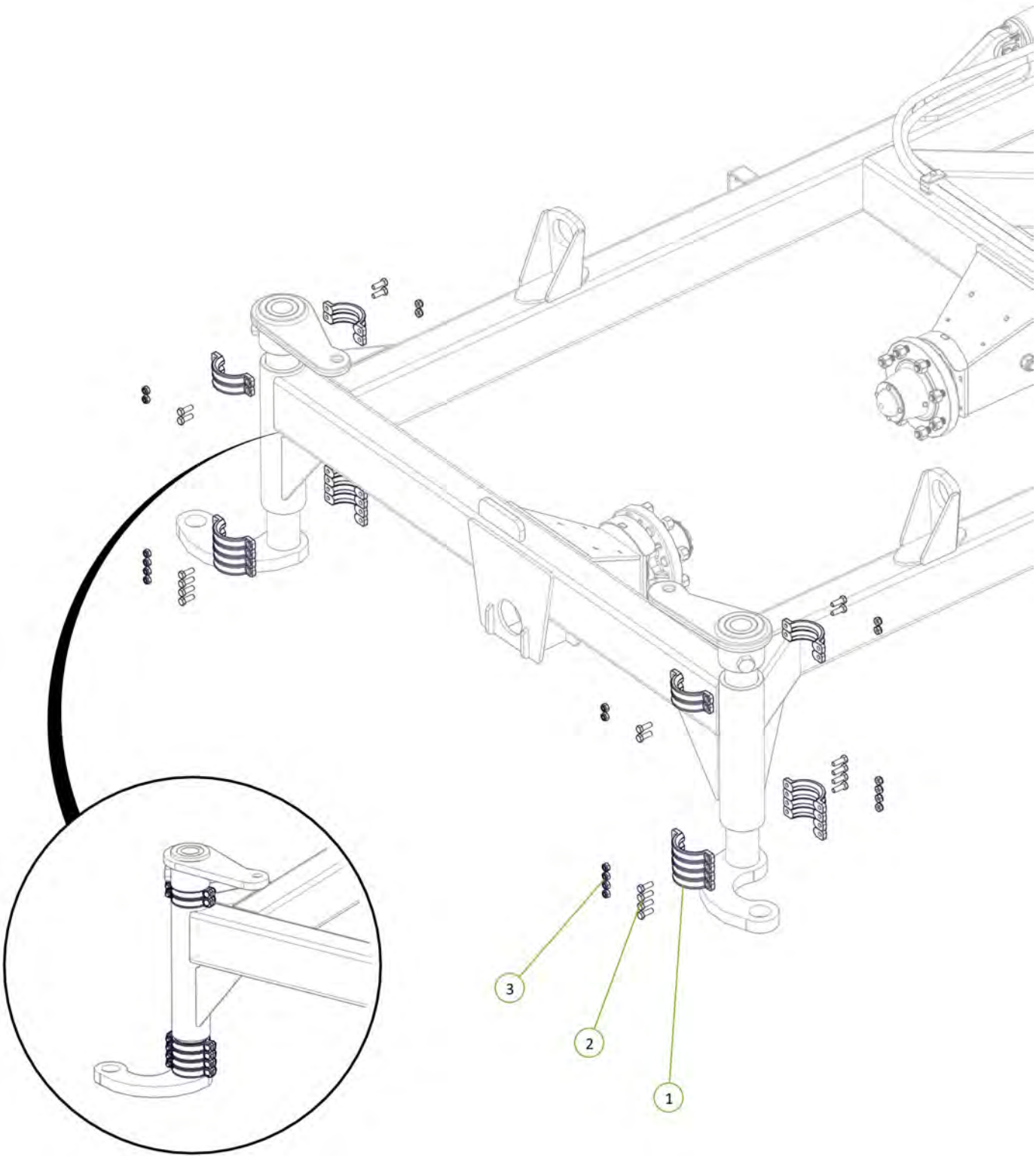

Item No.	Description	Number	Qty
1	Chain Tension Adjustor	0802-PCHTA	2
2	Heavy Duty Coil Spring 24mm	0801-K2455350	2
3	Tensioner Cup - Male	0801-KE0805-3	2
4	Female Spring Locator	0801-KE0805-4	2
5	Washer High Tensile 1 1/4"	0232-HT11-4	2

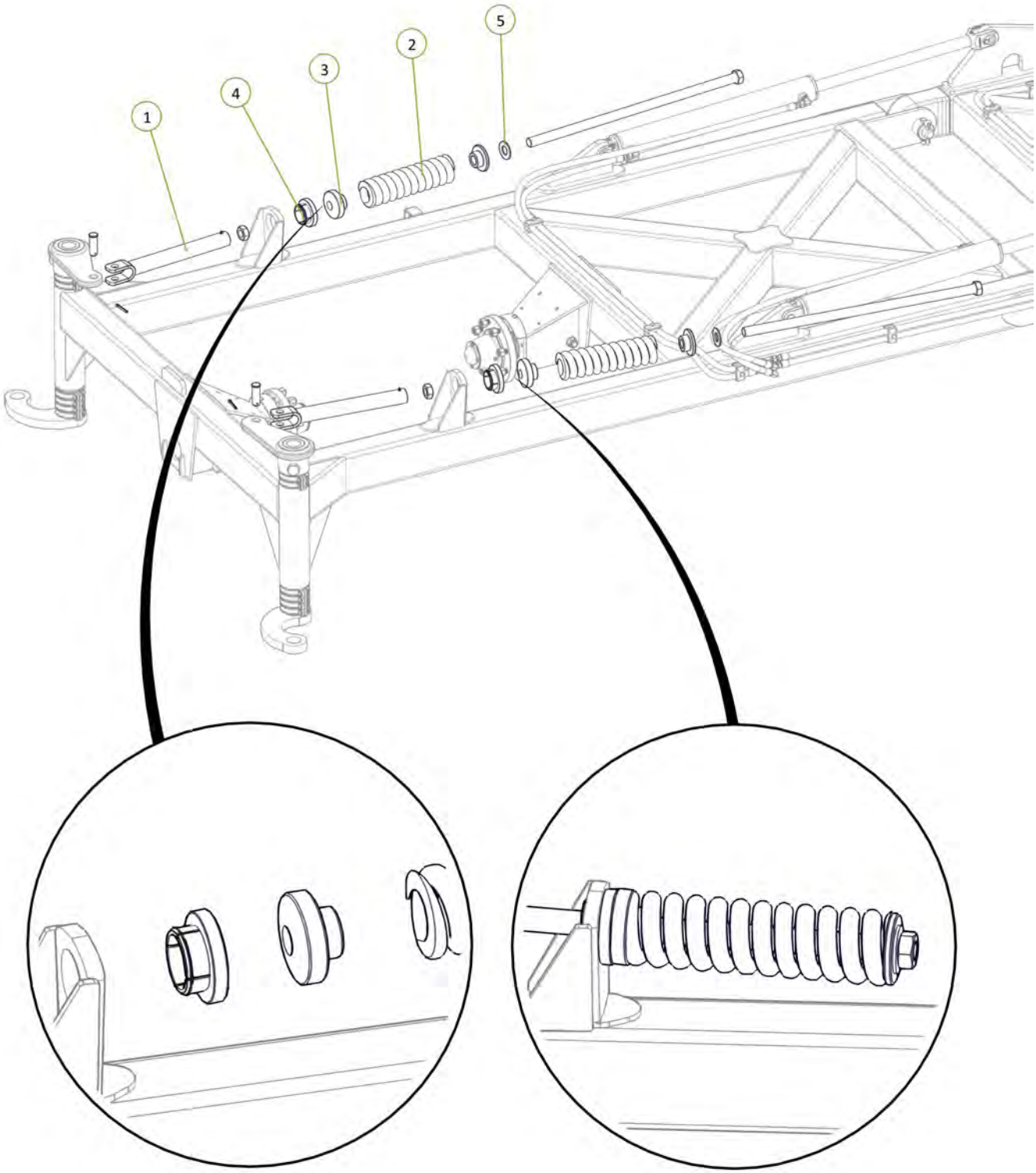

Item No.	Description	Number	Qty
1	Walking Axle Linkage	1610-33	2
2	M12 x 90 Class 10.9 ZP Bolt	0211-1290HT	4
3	Walking Axle Linkage Pivot Pin	1601-P38-220	4
4	1-1/2 ID x 1-1/4mm DU Bush	0113-24DU20	8
5	Nyloc Nut M12	0221-NYL12	4
6	Cotter Pin M13 x 63	0261-PINC1363	4

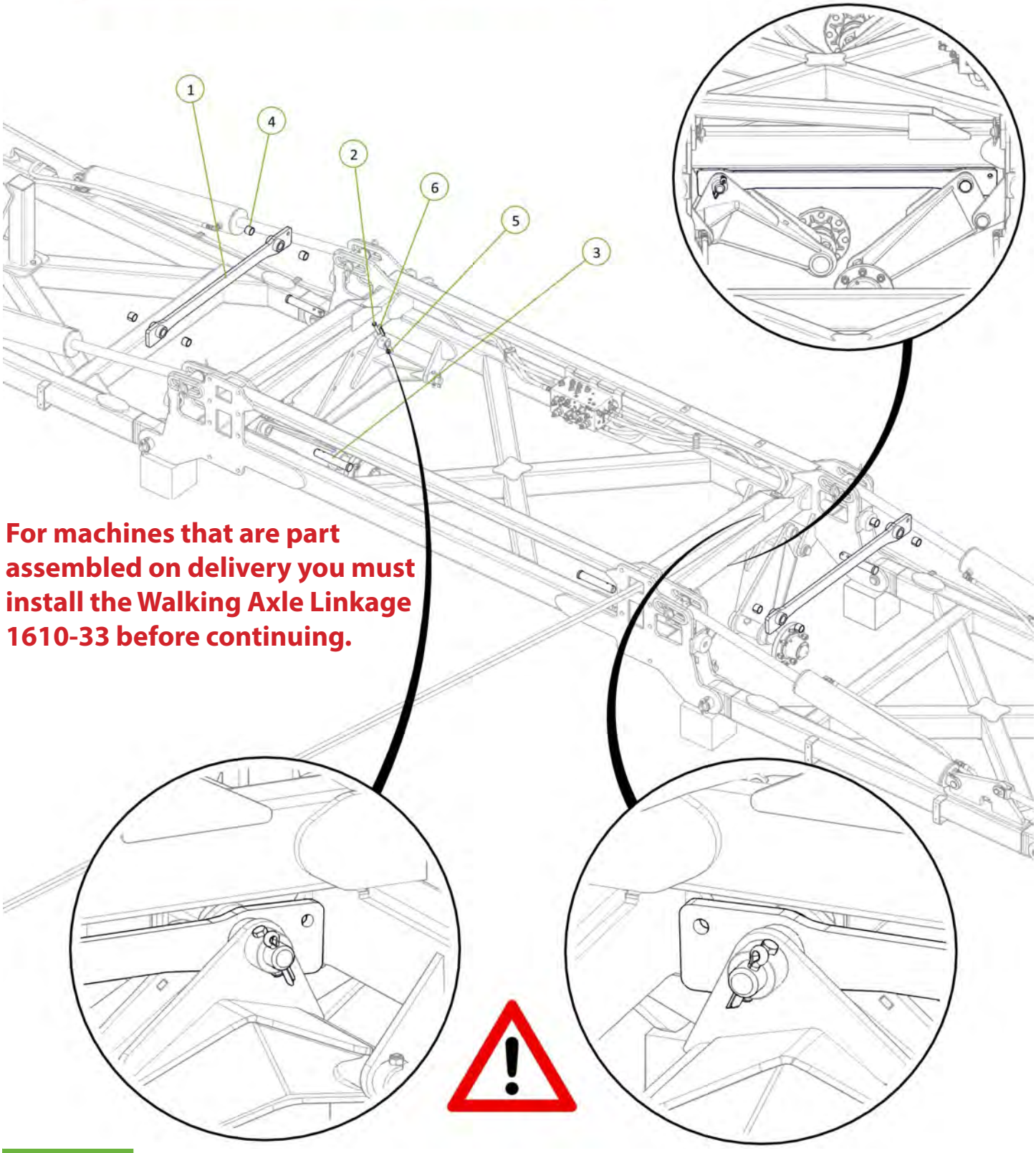

For machines that are part assembled on delivery you must install the Walking Axle Linkage 1610-33 before continuing.

Item No.	Description	Number	Qty
1	46' Main Pull - Nose	1646-02-01	1
2	46' Main Pull Right Hand Side	1646-02-02	1
3	46' Main Pull Left Hand Side	1646-02-03	1
4	46' Main Pull Brace	1646-02-04	1
5	M24 x 75 grade 8.8 zp Bolt	0211-2475	20
6	M16 x 50 grade 8.8 zp Bolt	0211-1650	8
7	Nyloc Nut M24	0221-NYL24	20
8	Nyloc Nut M16	0221-NYL16	8
9	Washer Flat M24	0231-F24	40
10	Washer Flat M16	0231-F16	16

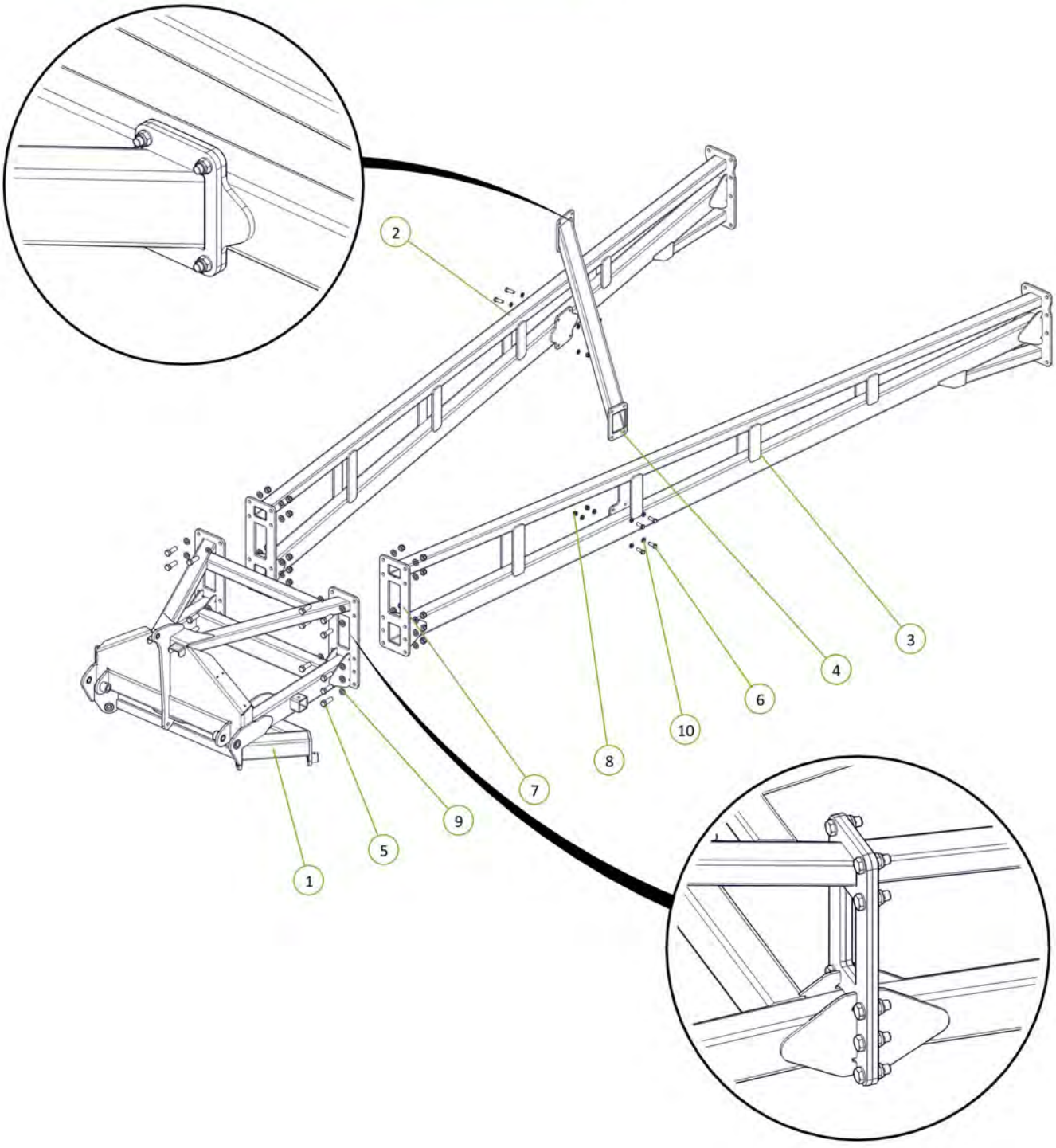

Item No.	Description	Number	Qty
1	M24 x 75 grade 8.8 zp Bolt	0211-2475	16
2	Nyloc Nut M24	0221-NYL24	16
3	Washer Flat M24	0231-F24	32

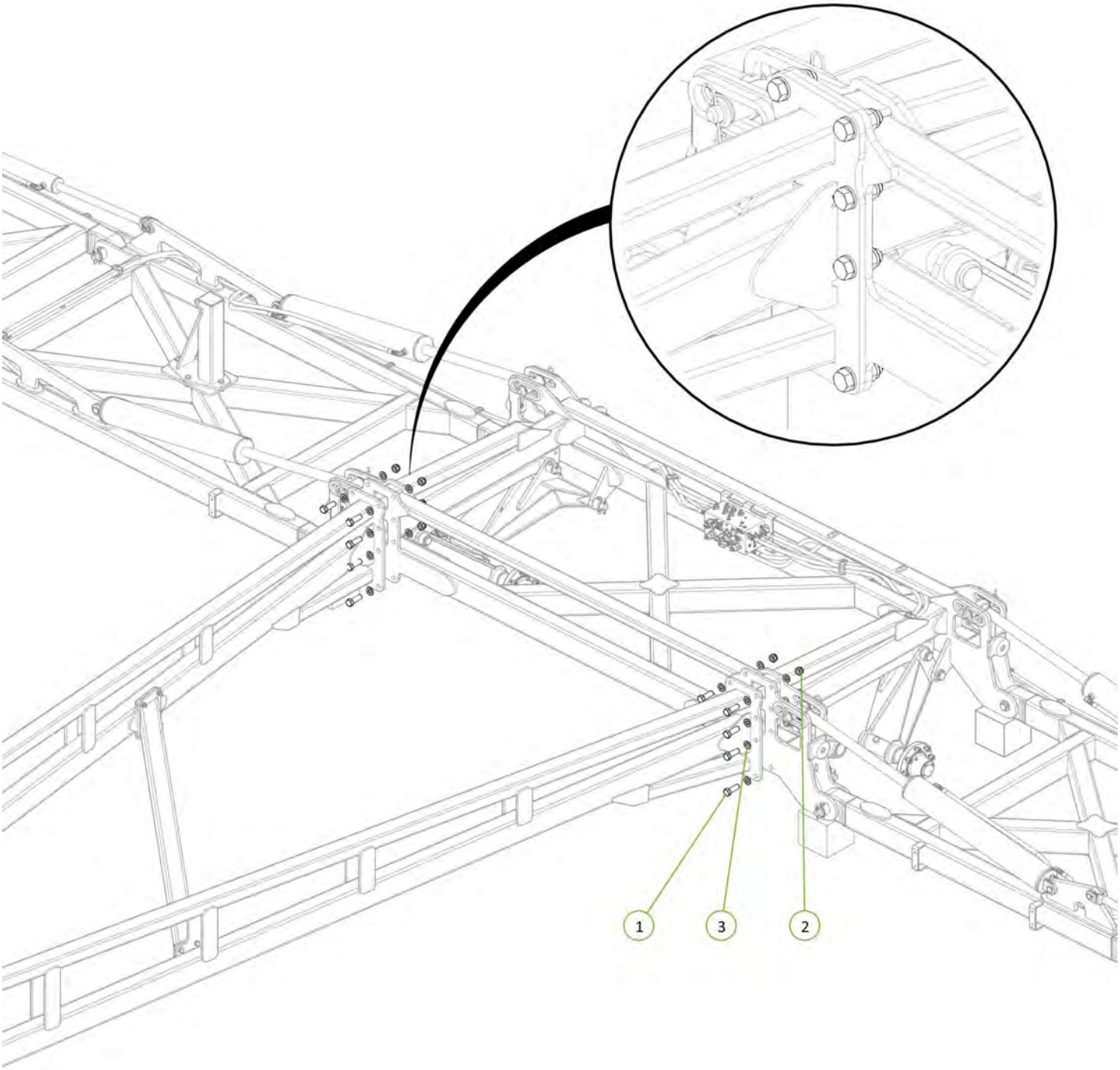

Item No.	Description	Number	Qty
1	400/55-22.5 Tyre on 8 on 8" PCD Rim (Right Hand)	0751-400-55-22.5TR-R	4
2	400/55-22.5 Tyre on 8 on 8" PCD Rim (Left Hand)	0751-400-55-22.5TR-L	4

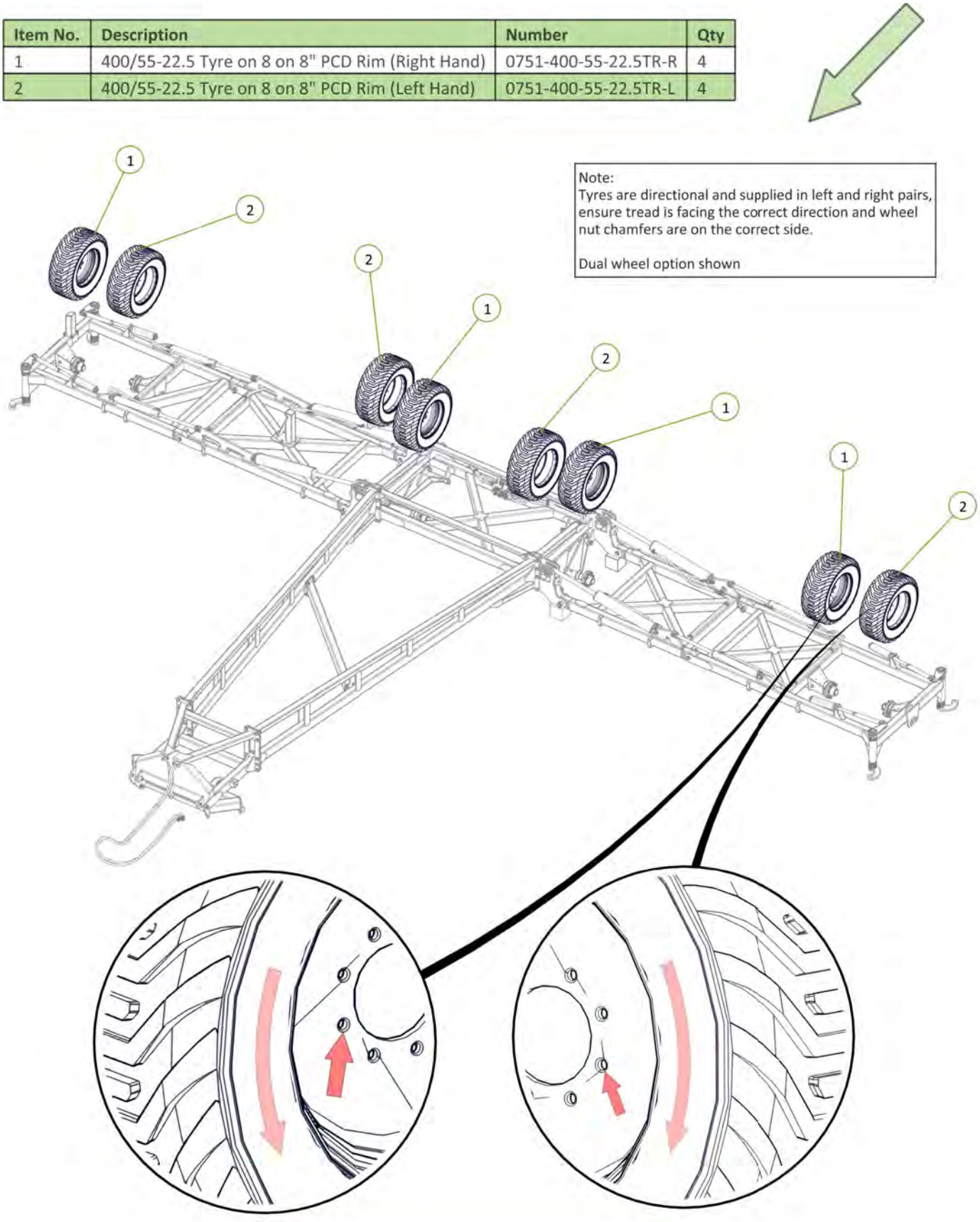

Note:
Tyres are directional and supplied in left and right pairs, ensure tread is facing the correct direction and wheel nut chamfers are on the correct side.

Dual wheel option shown

All wheel nuts tightened to 100ft-lb / 140Nm

Signed_____ Date__/__/__
Unit Serial Number_____

Item No.	Description	Number	Qty
1	US4t Heavy Duty Jack inc Handle	0810-37-US	1
2	Jack Pin	0801-B3077	1

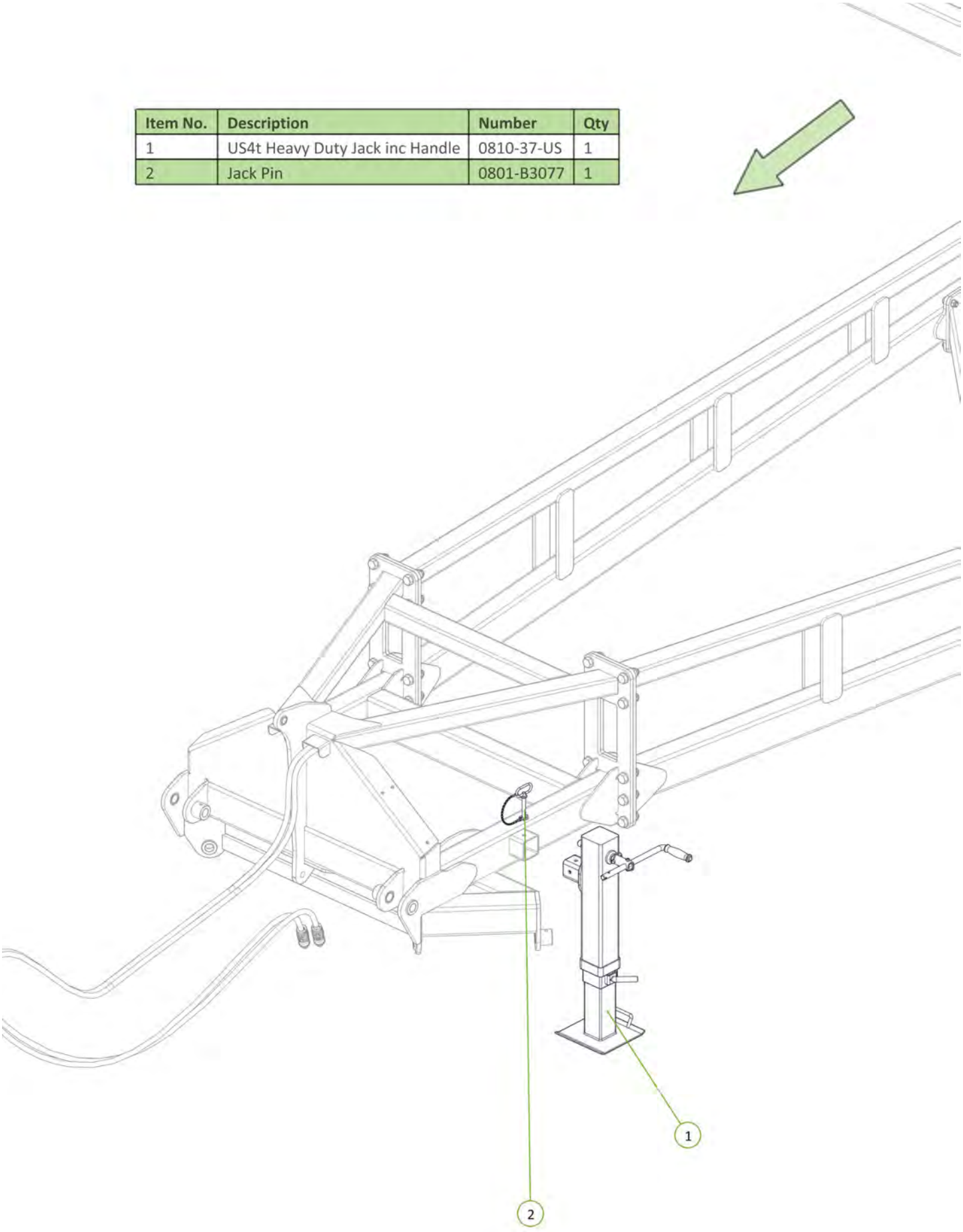

Item No.	Description	Number	Qty
2	Tractor to Sequence Valve EXT2 Port Fitted With Yellow EXT Decal	H46-2-03-YE-EXT2	1
3	Tractor to Sequence Valve RTC2 Port Fitted With Yellow RTC Decal	H46-2-04-YR-RCT2	1

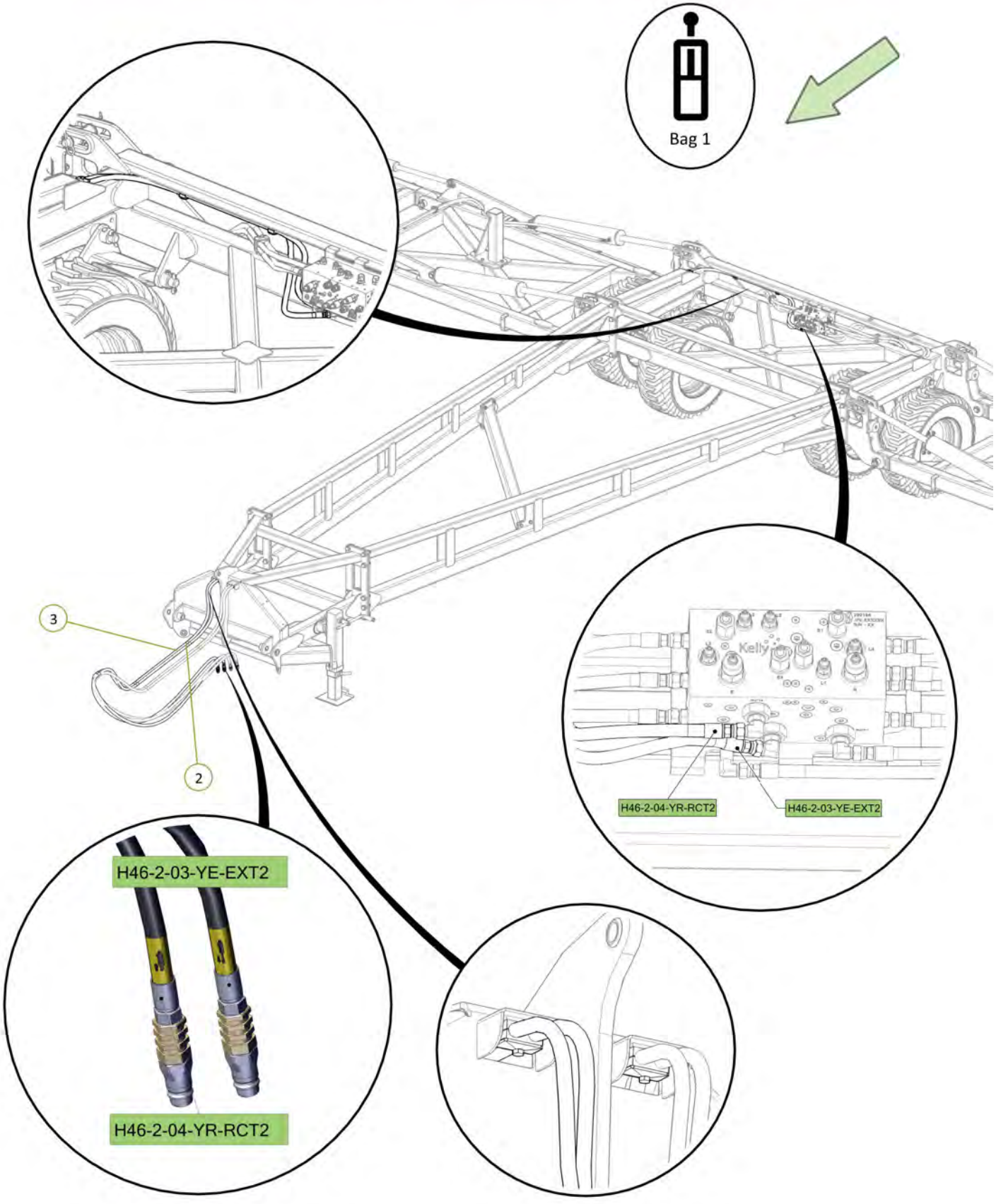

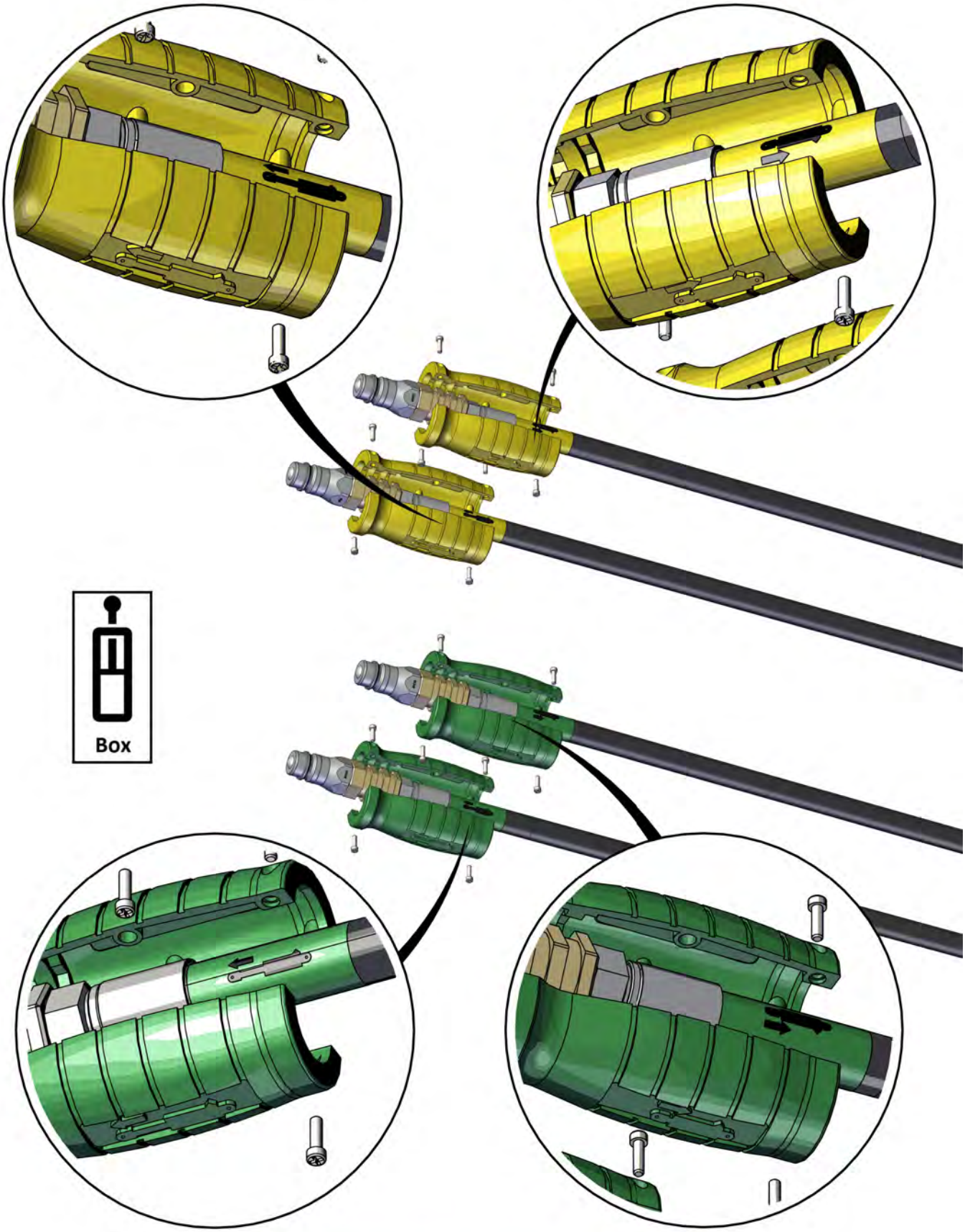

Hose grip handles fitted as per stickers on hoses ○

Signed_____ Date___/___/___
Unit Serial Number_____

Item No.	Description	Number	Qty
1	46' Rear A-Frame	1646-03-11	1
2	46' Rear A-Frame Right Hand Side	1646-03-12	1
3	46' Rear A-Frame Left Hand Side	1646-03-13	1
4	46' Rear A-Frame Front Brace	1646-03-14	1
5	46' Rear A-Frame Cross Brace	1646-03-15	1
6	M20 x 65 grade 8.8 ZP Bolt	0211-2065	15
7	Nyloc Nut M20	0221-NYL20	15
8	M16 x 50 grade 8.8 zp Bolt	0211-1650	16
9	Nyloc Nut M16	0221-NYL16	16
10	35 ID x 30mm DU Bush	0113-MB3530DU	4
11	Washer Flat M16	0231-F16	32
12	Washer Flat M20	0231-F20	30

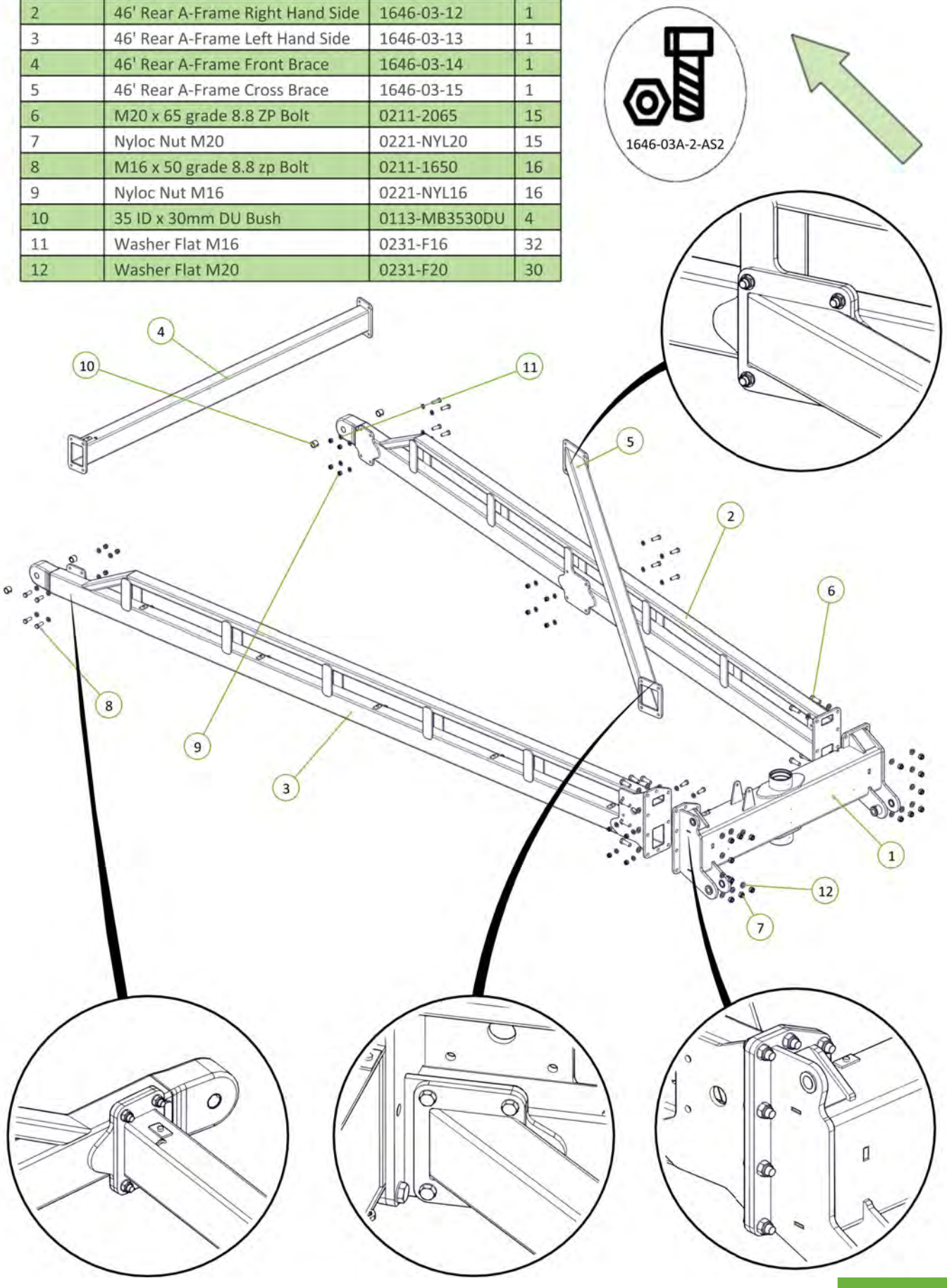

Item No.	Description	Number	Qty
1	Jockey Wheel 90mm Shaft 70mm Axles	1610-13-90	1
2	Plain Spherical Bearing 90mm	0113-GE90DO-2RSP	2
3	Circlip Internal 130mm	0171-J130	2
4	Circlip External 90mm	0172-D1400-90	1
5	TC Seal 90mm x 135mm x 12mm	0121-TC12906	1
6	TC Seal 110mm x 140mm x 12mm	0121-TC12700	1
7	Grease Nipple 1/4" UNF 45°	0181-GN1/445	2

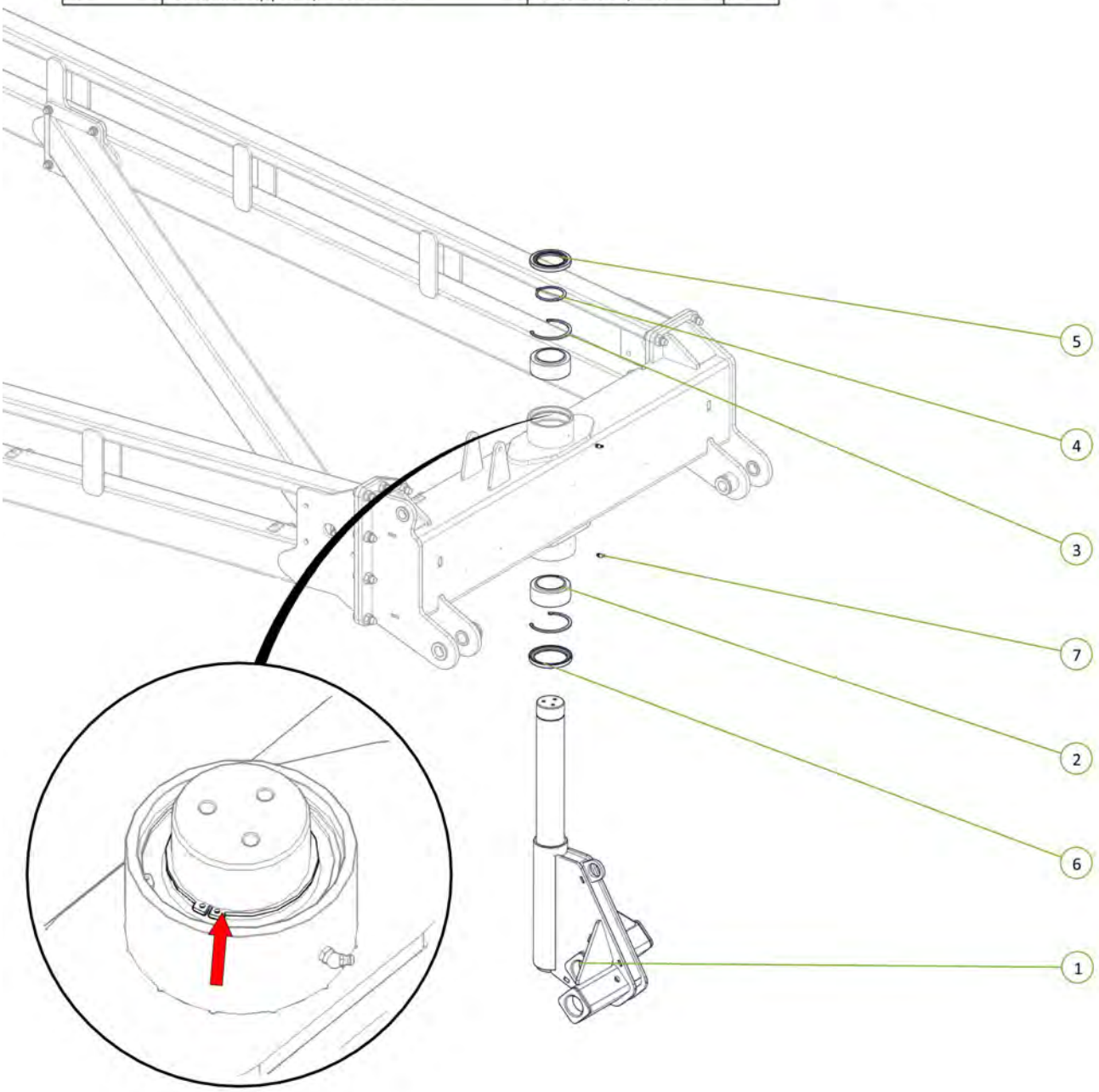

Circlip fitted to jockey wheel shaft ◯

Signed_____ Date__/__/__
Unit Serial Number_____

Item No.	Description	Number	Qty
1	Brake Disc	1600-405	1
2	M12 x 24 Wheel Bolt	0216-WB1224	3

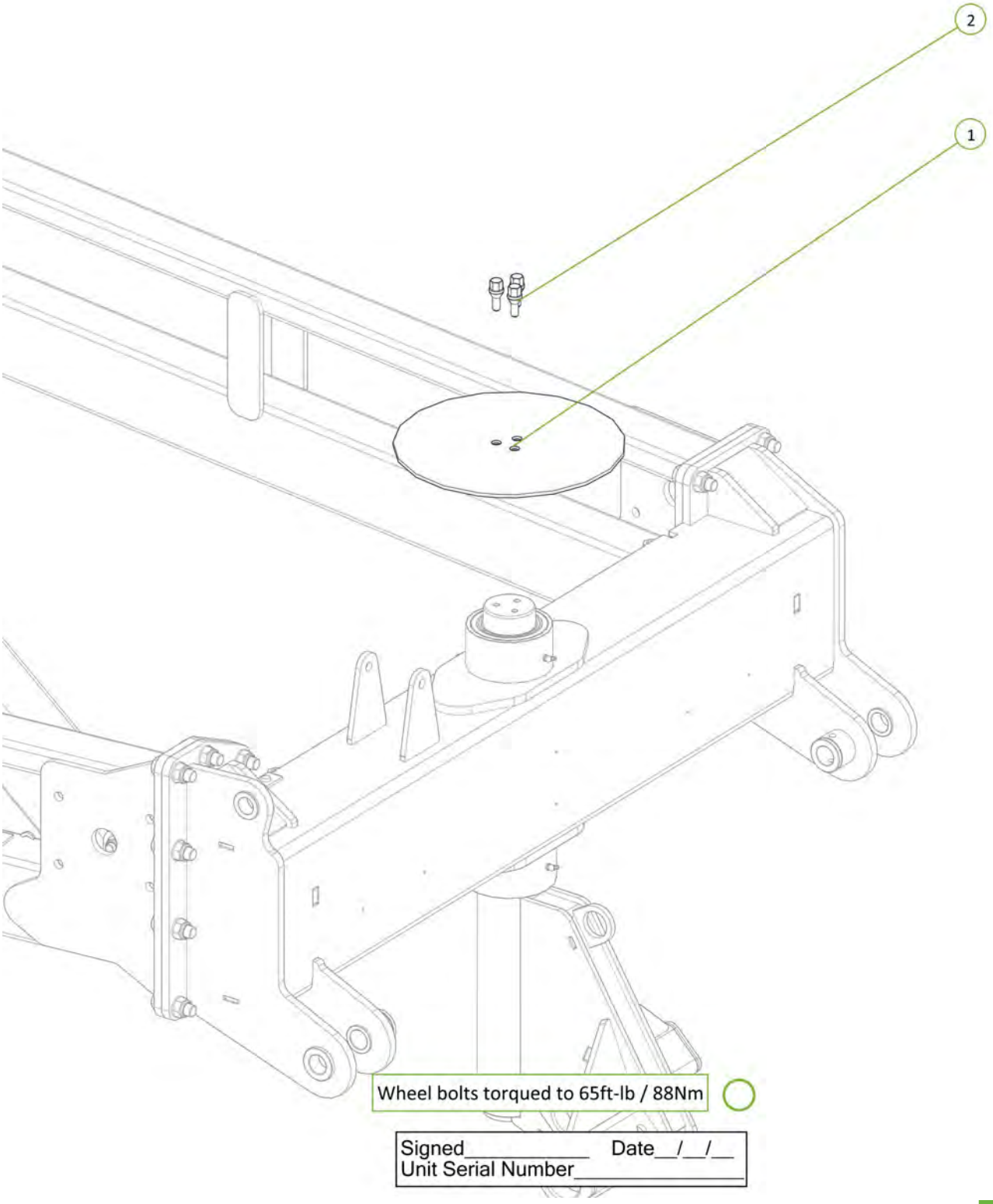

Signed_____ Date__/__/__
Unit Serial Number_____

Item No.	Description	Number	Qty
1	Jockey Wheel Brake Caliper	0810-12CAL	1
2	Brake Compression Spring	0801-KE009	1
3	Washer Square M16 x 50 x 5	0231-SQ16505	1
4	M16 x 150 grade 8.8 zp Bolt	0211-16150	2
5	Nyloc Nut M16	0221-NYL16	1
6	Washer Flat M16	0231-F16	2

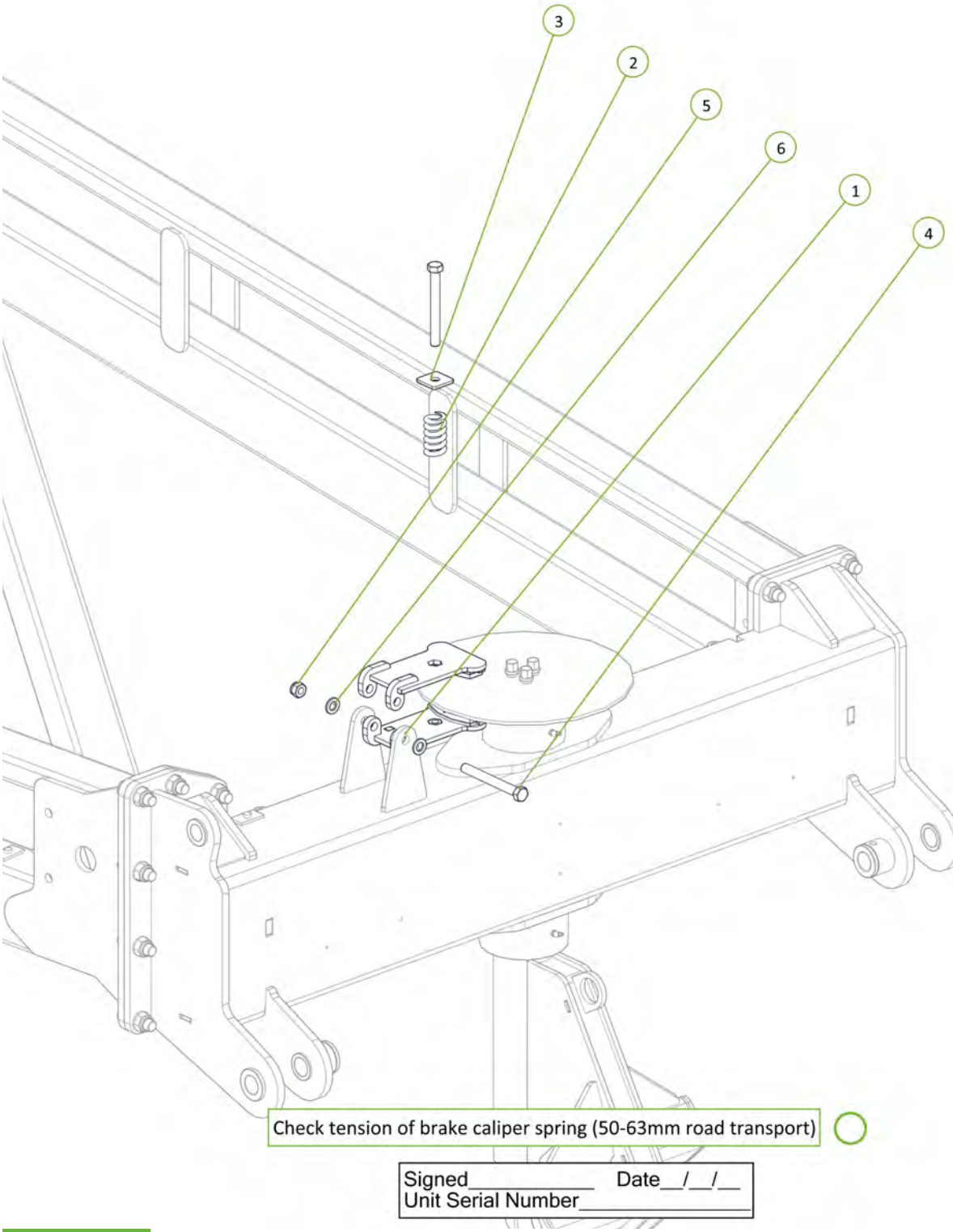

Check tension of brake caliper spring (50-63mm road transport) ○

Signed_____ Date__/__/__
Unit Serial Number_____

Item No.	Description	Number	Qty
1	2.75"R C/W 6 tonne 8 on 8" PCD Complete Assembly inc GS	0733-LG6080067	2
2	M20 x 140 grade 8.8 ZP Bolt	0211-20140	2
3	Nyloc Nut M20	0221-NYL20	2
4	Washer Flat M20	0231-F20	4

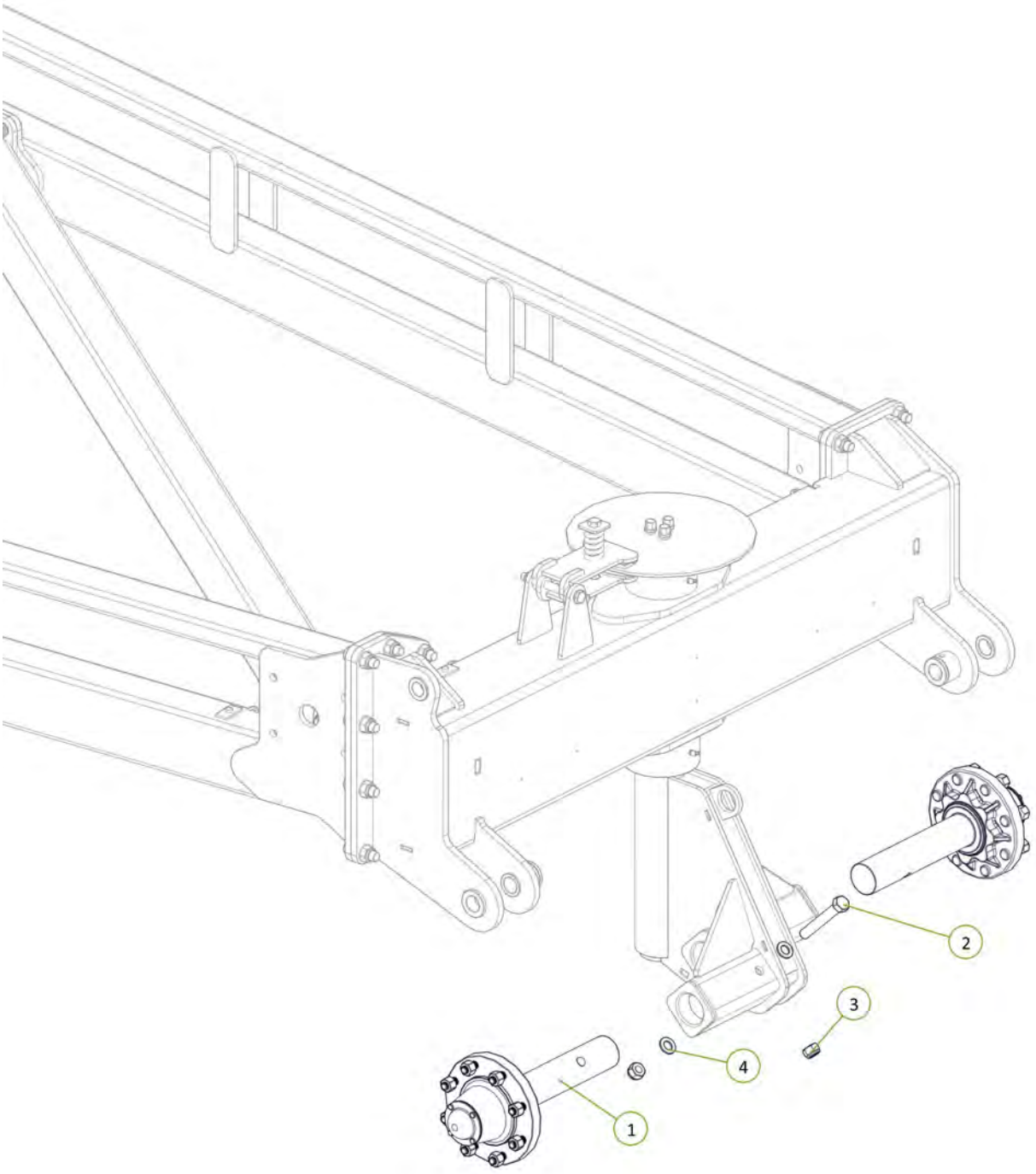

Item No.	Description	Number	Qty
1	31/13.5-15 Tire and Rim Assembly	0751-31-13.5-15	2

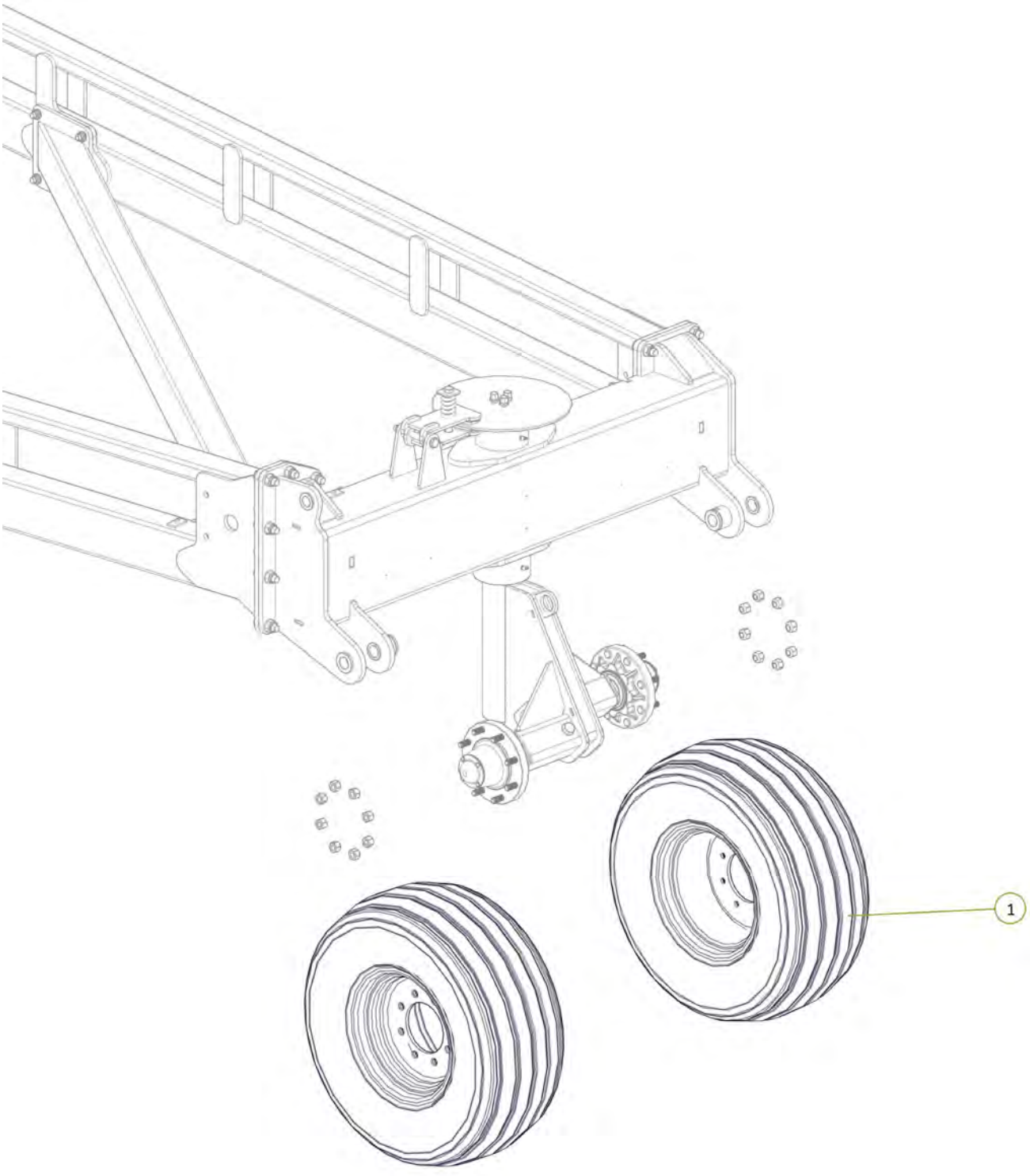

All wheel nuts tightened to 100ft-lb / 140Nm

Signed_____ Date__/__/__
Unit Serial Number_____

Item No.	Description	Number	Qty
1	PCH Wing Pivot Pin	0801-10-08-235	2
2	Nyloc Nut M12	0221-NYL12	2
3	M12 x 90 Class 10.9 ZP Bolt	0211-1290HT	2
4	Cotter Pin M13 x 63	0261-PINC1363	2

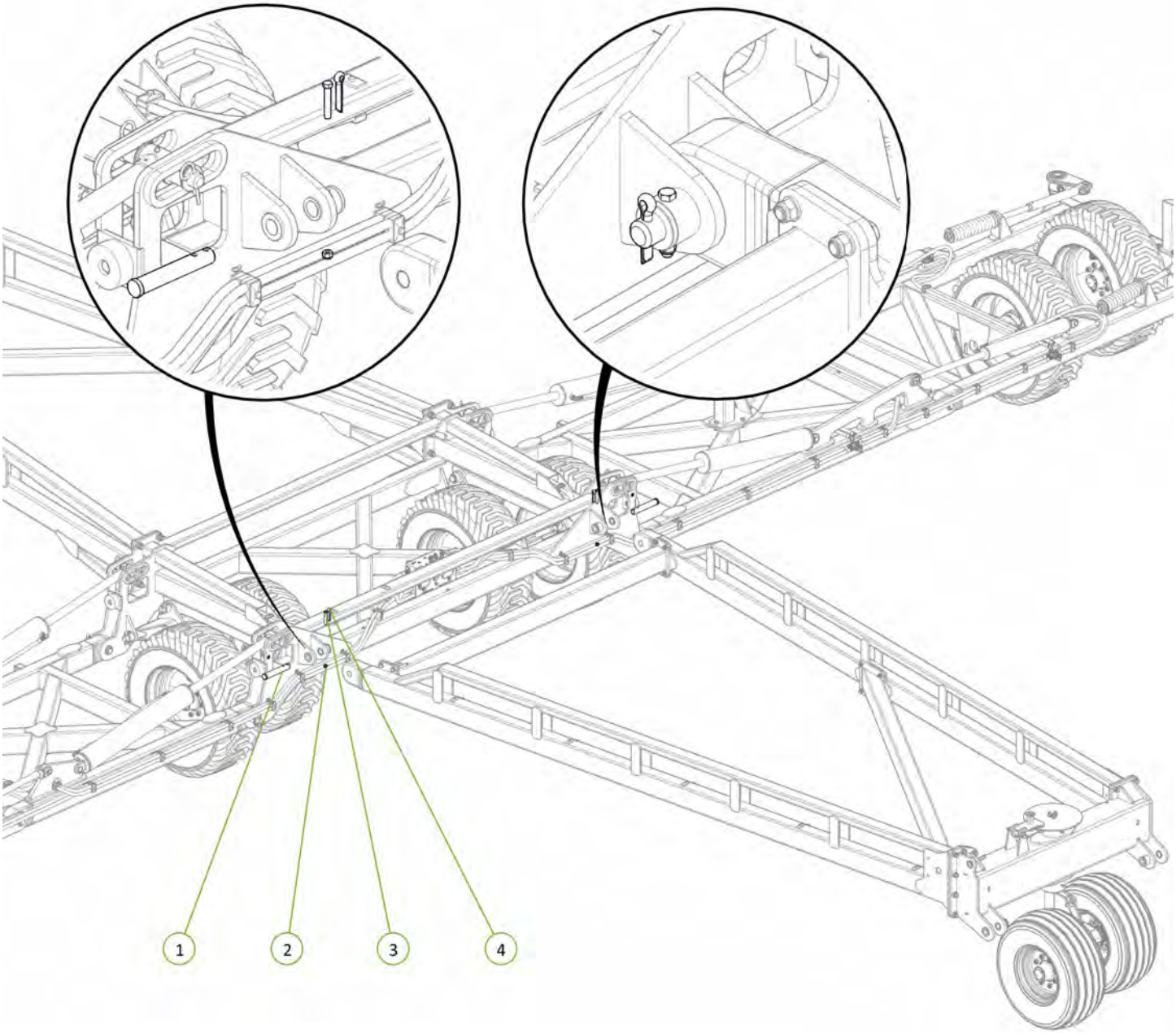

Item No.	Description	Number	Qty
1	Rear Tail	1510-40S	1
2	35 ID x 30mm DU Bush	0113-MB3530DU	4
3	PCH Wing Pivot Pin	0801-10-08-235	2
4	M12 x 90 Class 10.9 ZP Bolt	0211-1290HT	2
5	Nyloc Nut M12	0221-NYL12	2
6	Cotter Pin M13 x 63	0261-PINC1363	2

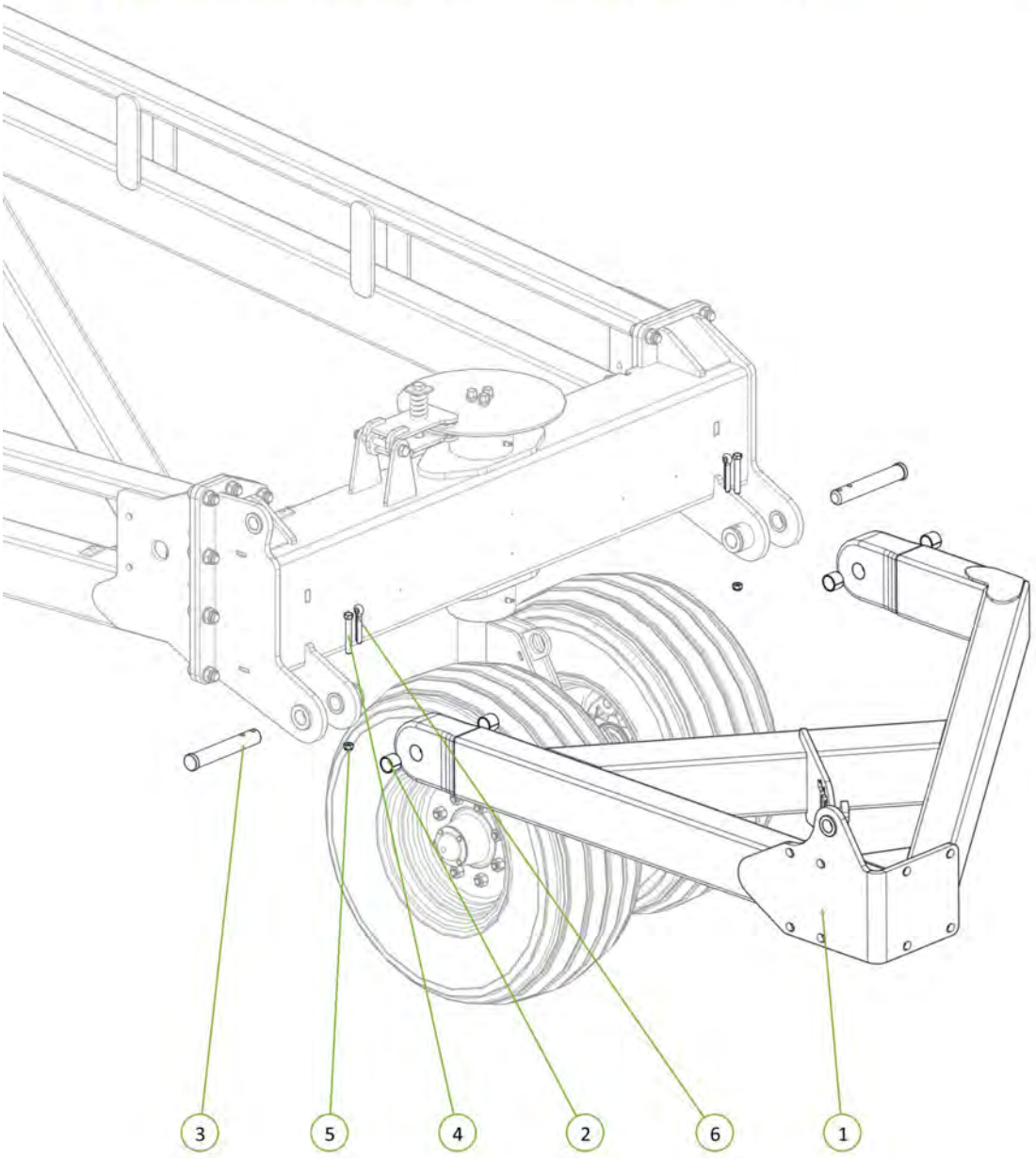

Item No.	Description	Number	Qty
1	4" Bore 24" Stroke 1.75" Rod Hydraulic Cylinder	0311-424	1

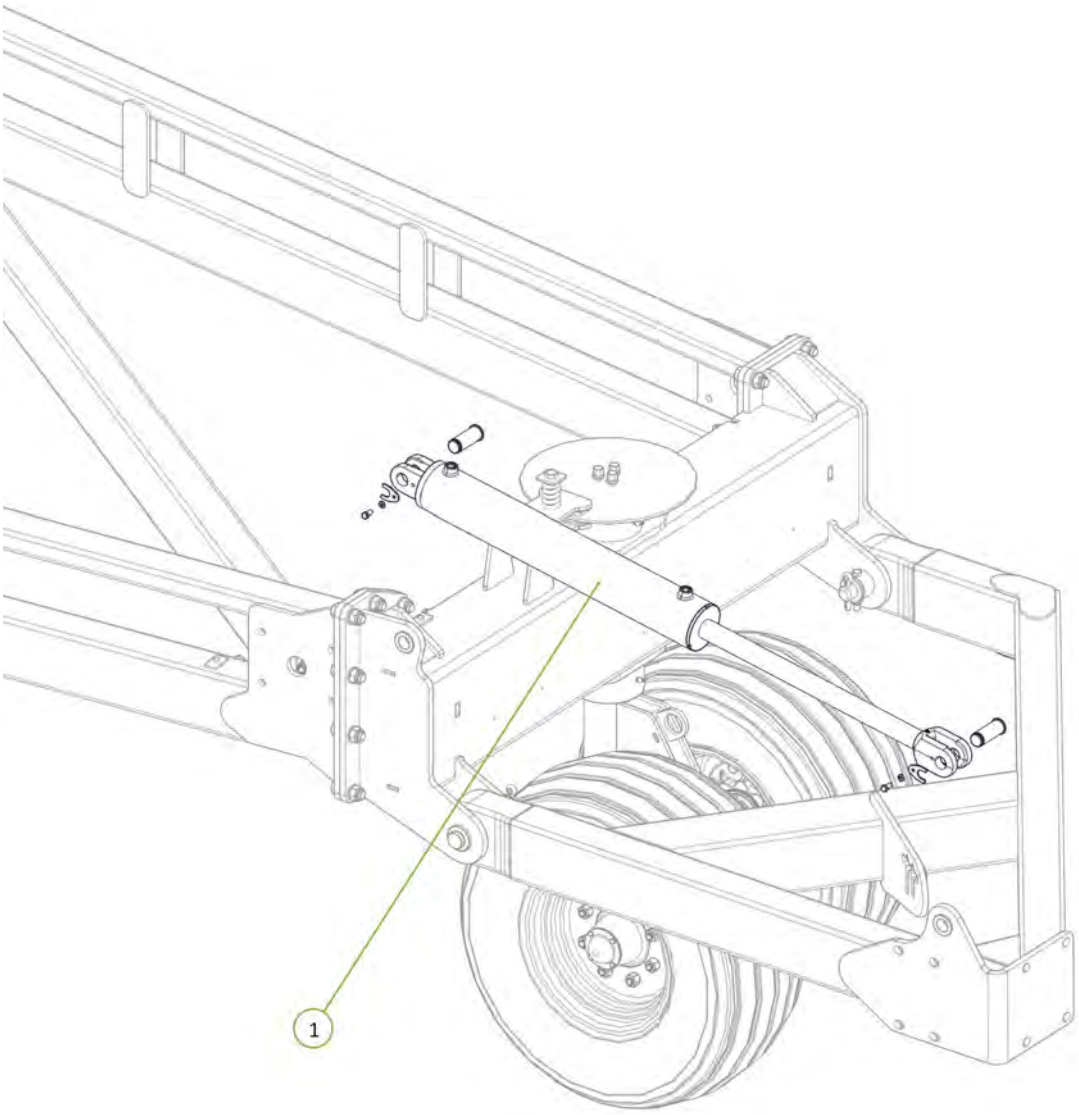

Item No.	Description	Number	Qty
1	3/4" JIC Male 3/4" UN O Ring Male 90° Elbow	0323-S91-1212	2

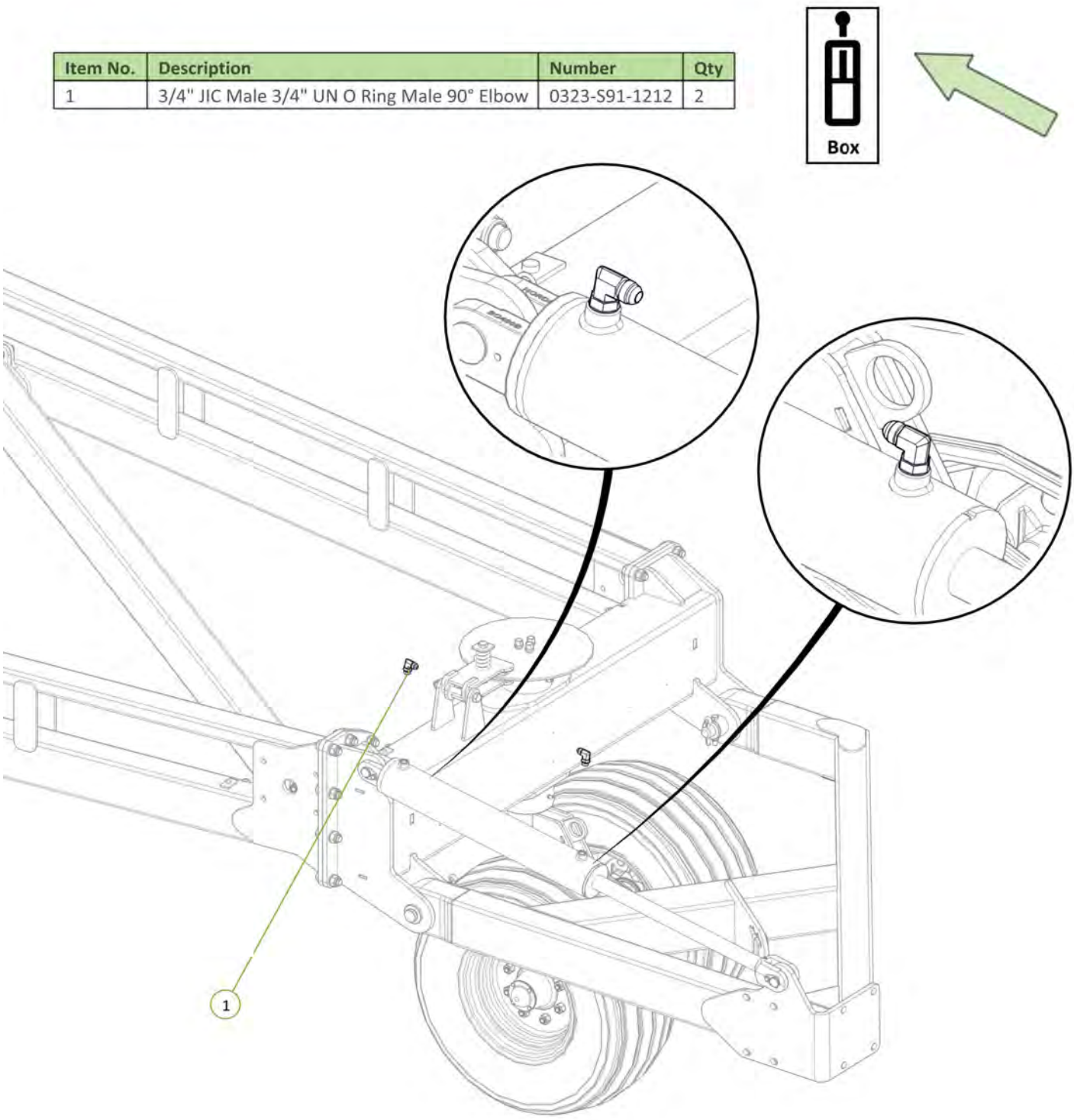

Item No.	Description	Number	Qty
2	Sequence Valve TE1 Port to Tail Cylinder Extend Port	H46-2-09	1
3	Sequence Valve TR1 Port to Tail Cylinder Retract Port	H46-2-10	1

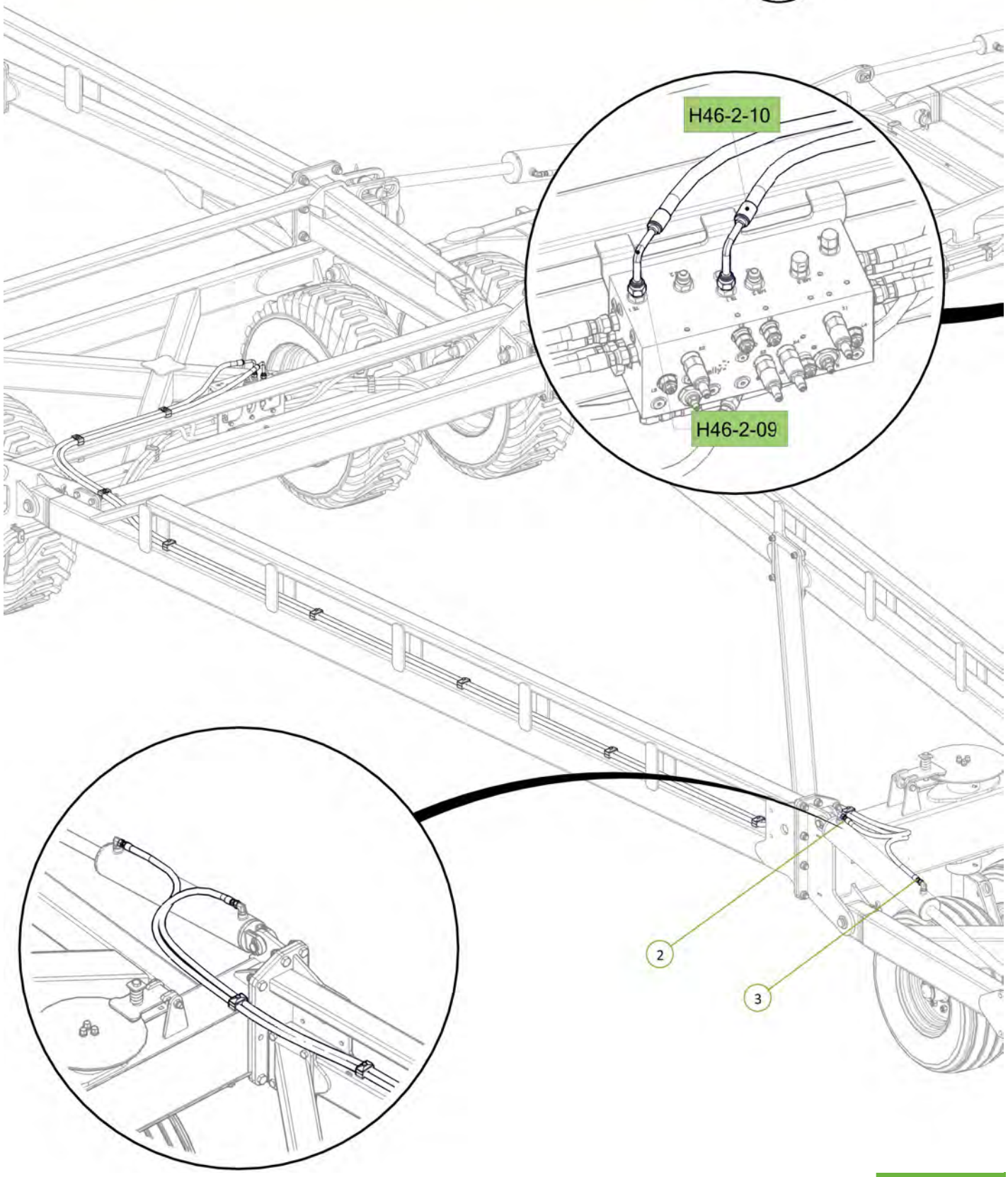

Item No.	Description	Number	Qty
1	46' Front Module Frame	1610-28-46-2	1
2	U-Bolt M16 x 190 Deep x 106 Wide	0271-16190106U	10
3	Washer Flat M16	0231-F16	20
4	Nyloc Nut M16	0221-NYL16	20

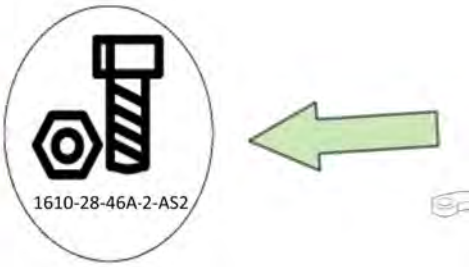

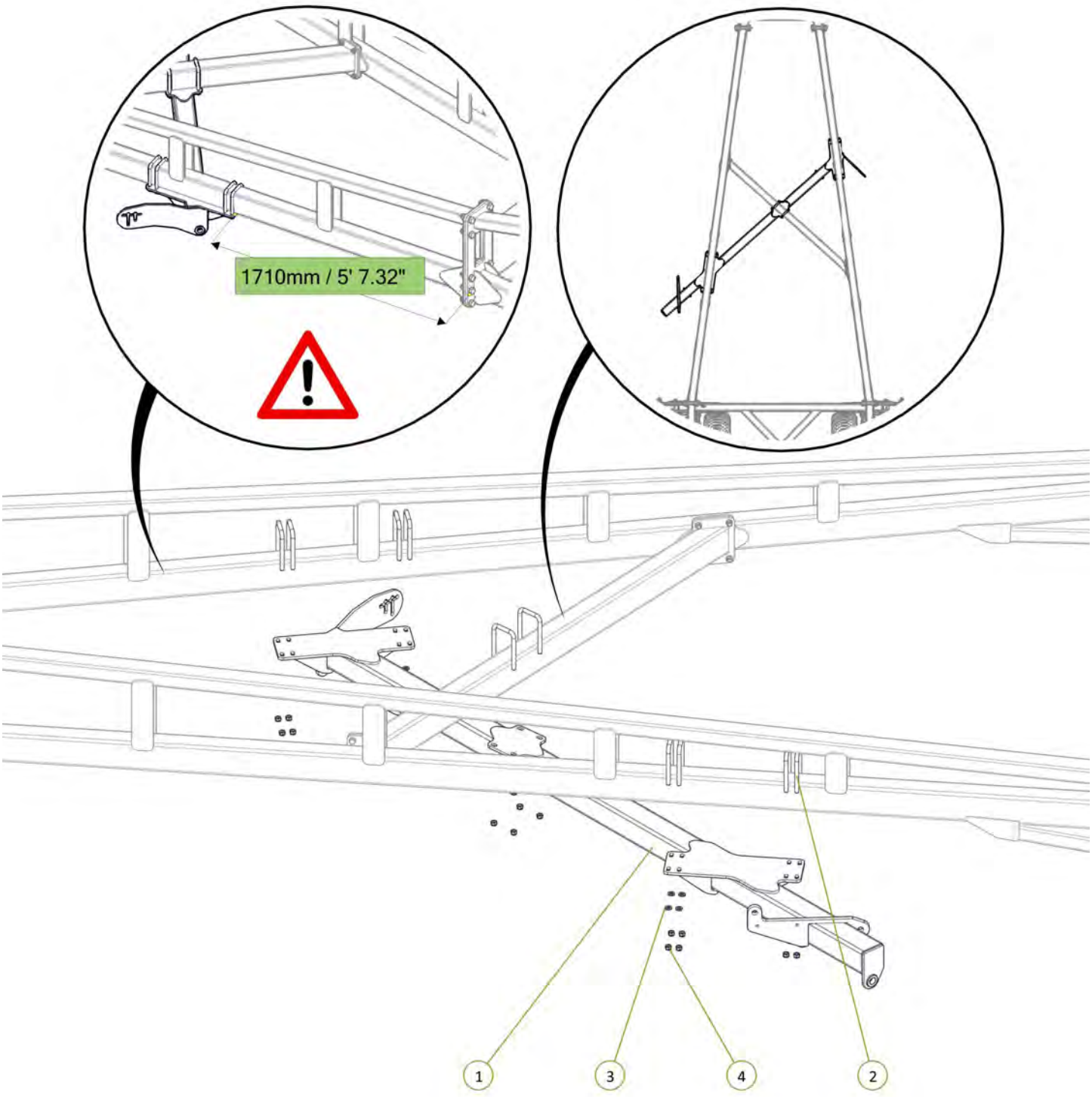

Item No.	Description	Number	Qty
1	46' Rear Module Frame	1610-29-46-2	1
2	U-Bolt M16 x 190 Deep x 106 Wide	0271-16190106U	8
3	Washer Flat M16	0231-F16	16
4	Nyloc Nut M16	0221-NYL16	16

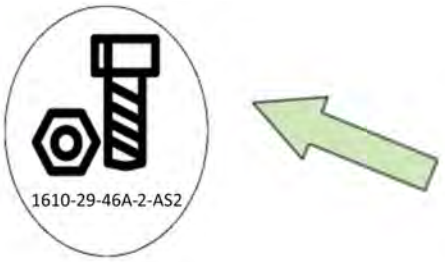

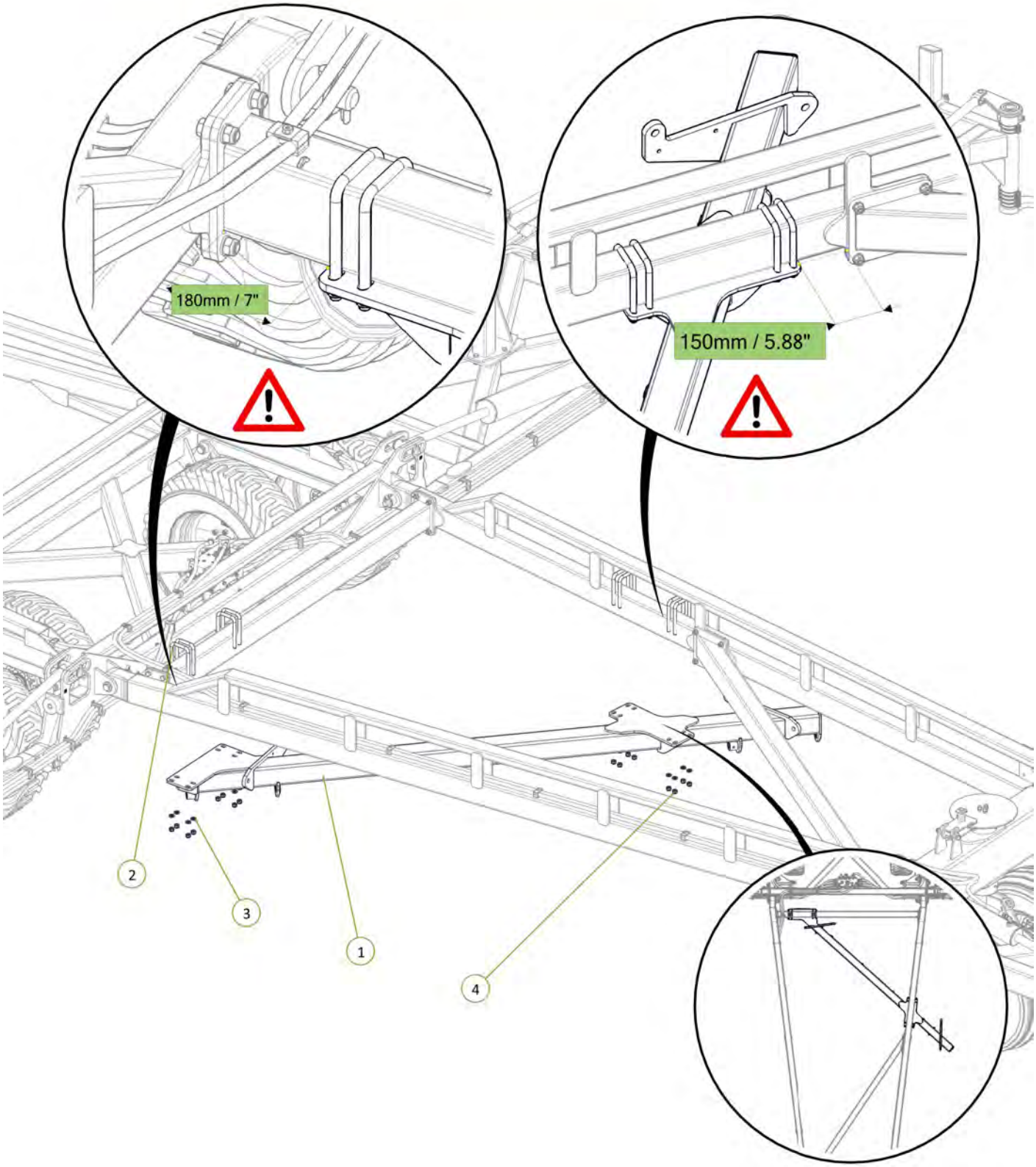

Item No.	Description	Number	Qty
1	Long Module Lift Arm	1610-106	1
2	Clevis Pin 25mm x 75mm	0801-KE0307-1	1
3	Cotter Pin M5 x 50	0261-PINC550	1
4	Washer Flat M24	0231-F24	1

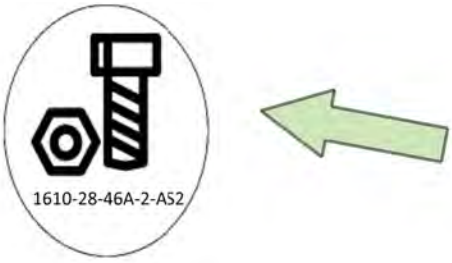

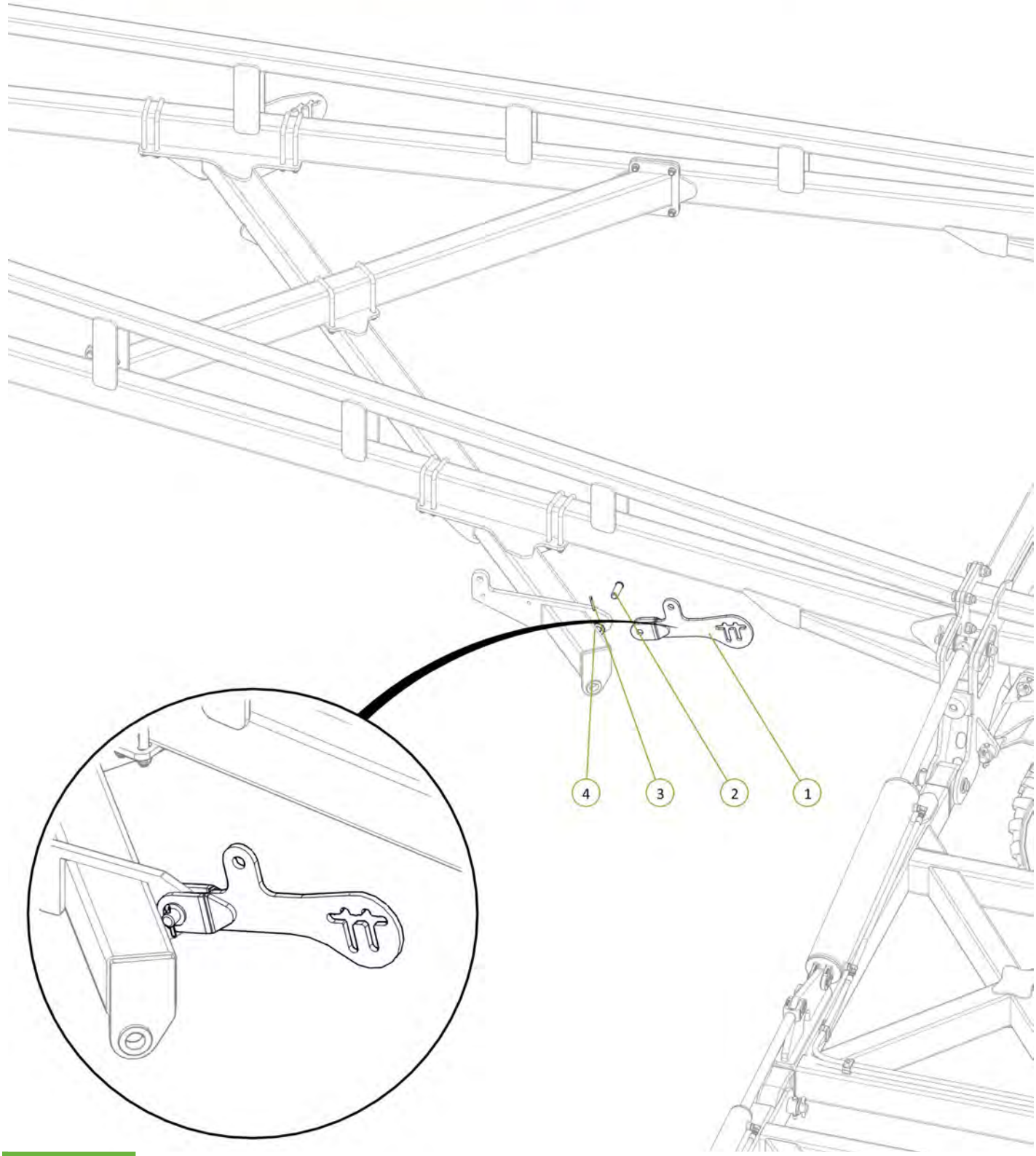

Item No.	Description	Number	Qty
1	2.5" Bore x 6" Stroke 1.5" Rod Side Port Cylinder	0311-256SP	1

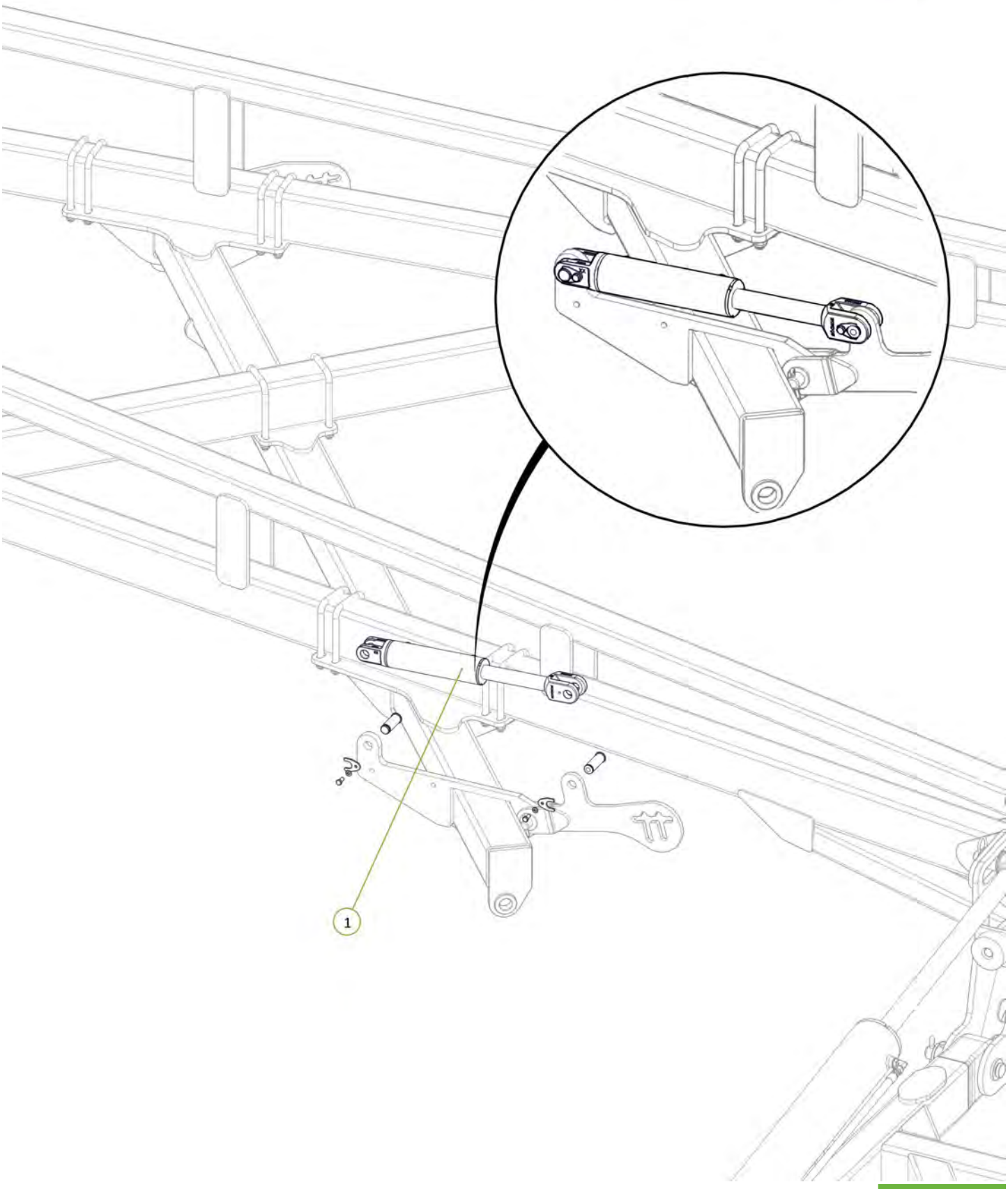

Item No.	Description	Number	Qty
1	3/4" JIC Male 3/4" UN O Ring Male 90° Elbow	0323-S91-1212	1
2	3/4" JIC Male 3/4" UN O Ring Male 45° Elbow	0323-S88-1212	1

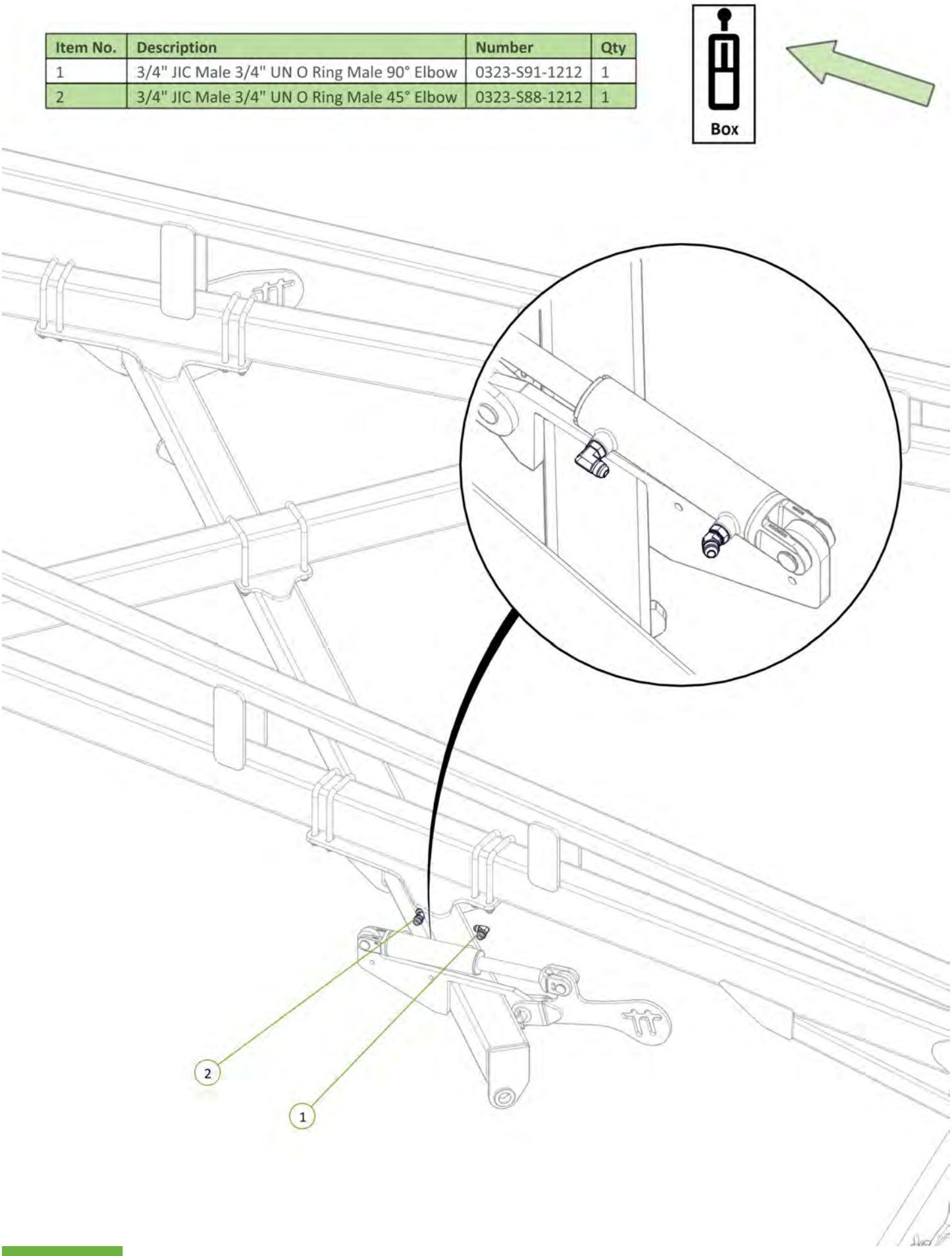

Item No.	Description	Number	Qty
1	Sequence Valve ME3 Port to Front Module Cylinder Extend Port	H46-2-07	1
2	Sequence Valve MR3 Port to Front Module Cylinder Retract Port	H46-2-08	1

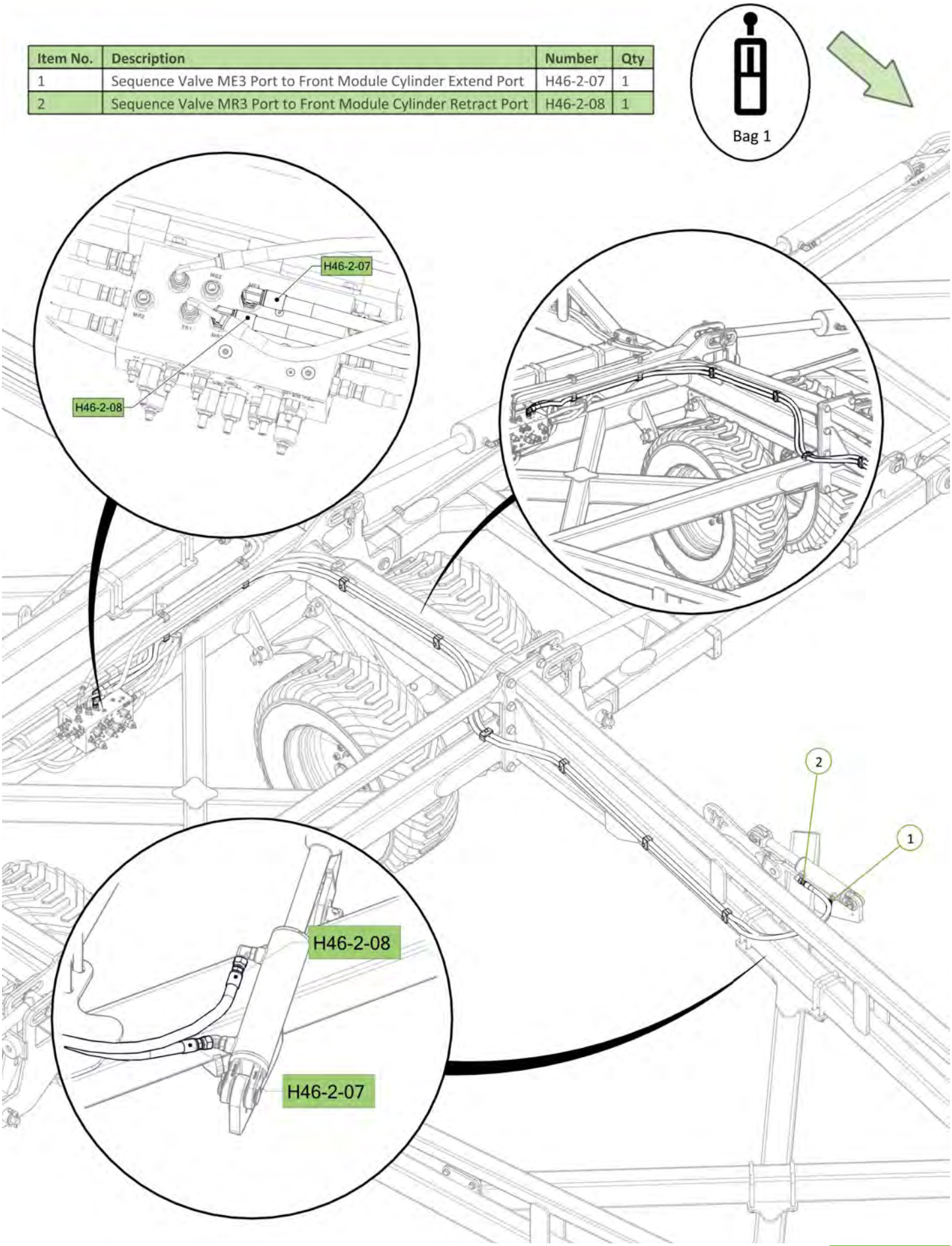

Item No.	Description	Number	Qty
1	Long Module Lift Arm	1610-106	2
2	Clevis Pin 25mm x 75mm	0801-KE0307-1	2
3	Washer Flat M24	0231-F24	2
4	Cotter Pin M5 x 50	0261-PINC550	2

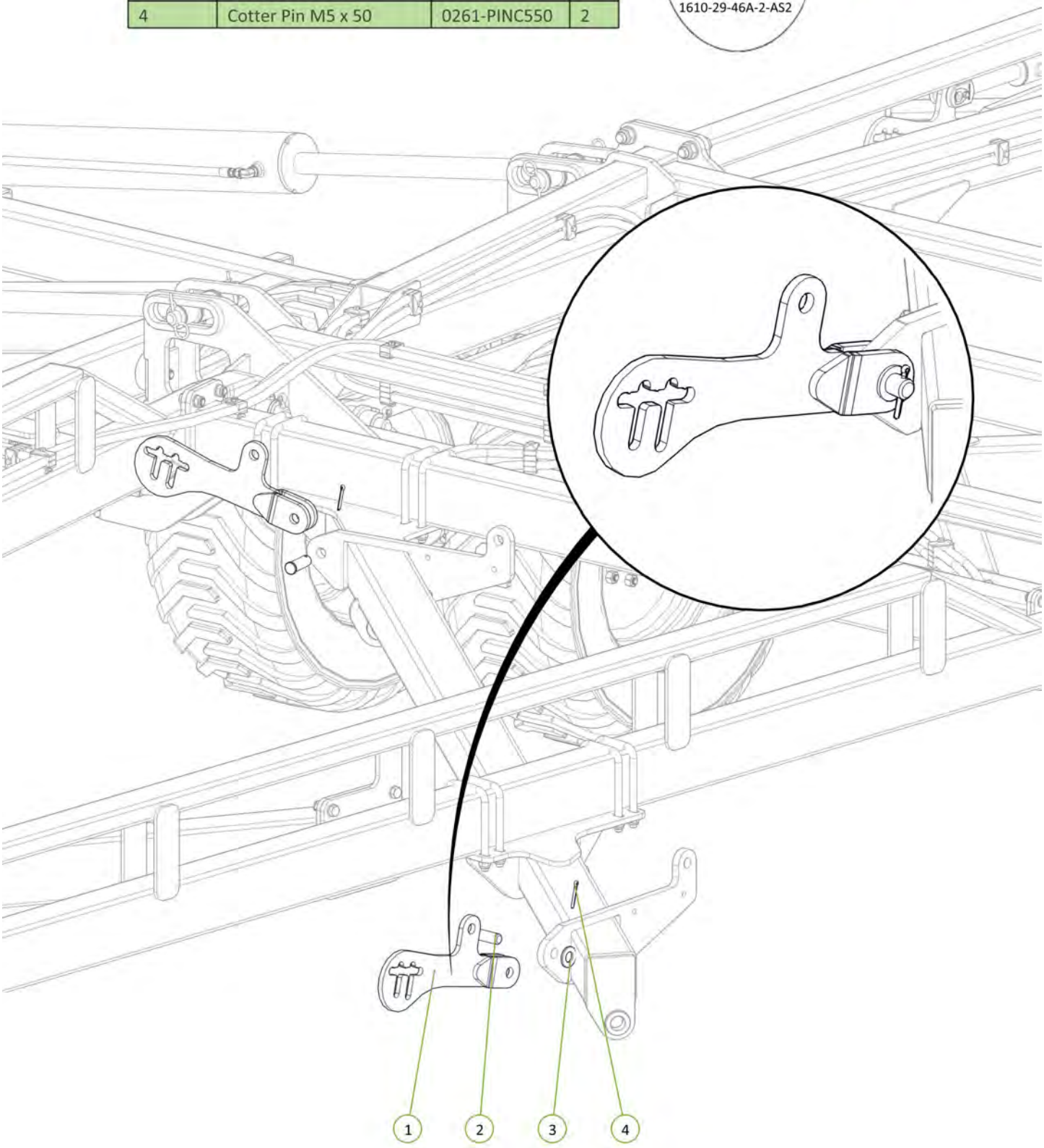

Item No.	Description	Number	Qty
1	2.5" Bore x 6" Stroke 1.5" Rod Side Port Cylinder	0311-256SP	2

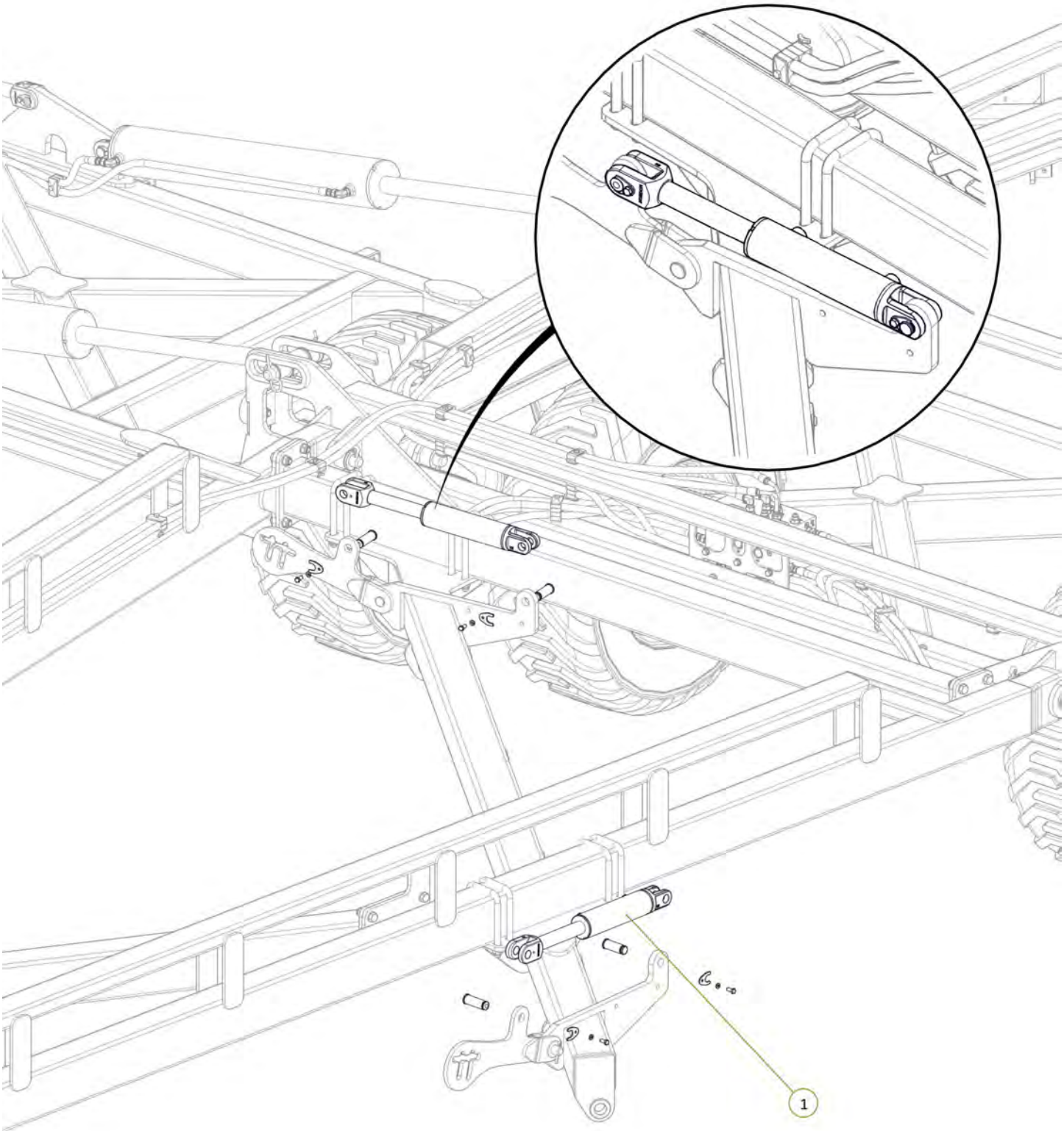

Item No.	Description	Number	Qty
1	3/4" JIC Male 3/4" UN O Ring Male 45° Elbow	0323-S88-1212	1
2	3/4" JIC Male 3/4" UN O Ring Male 90° Elbow	0323-S91-1212	1
3	3/4" JIC Male 3/4" JIC Male 3/4" UN O Ring Male Tee	0324-S92-121212	2

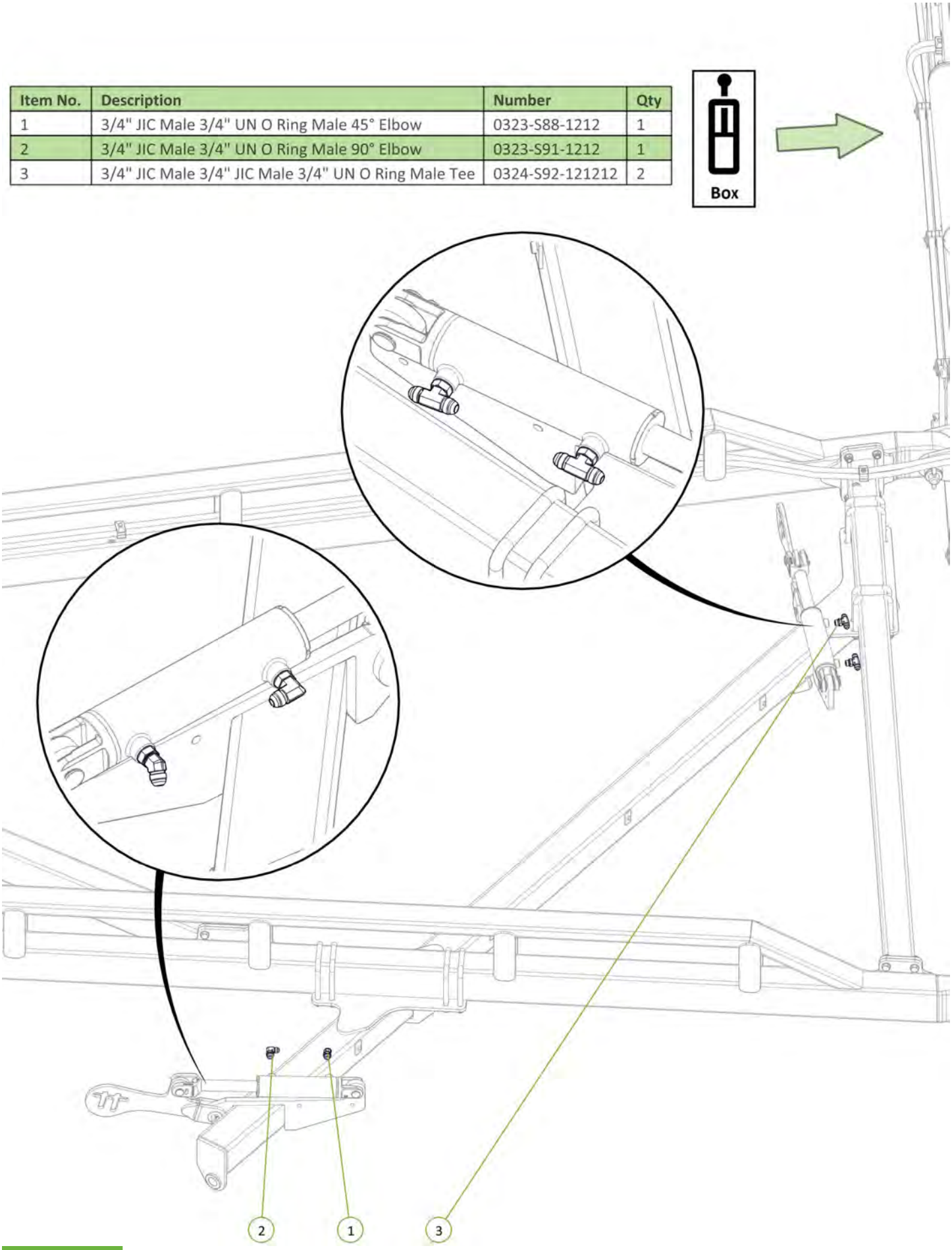

Item No.	Description	Number	Qty
1	Sequence Valve ME2 Port to LH Rear Module Extend Tee	H46-2-11	1
2	Sequence Valve MR2 Port to LH Rear Module Retact Tee	H46-2-13	1

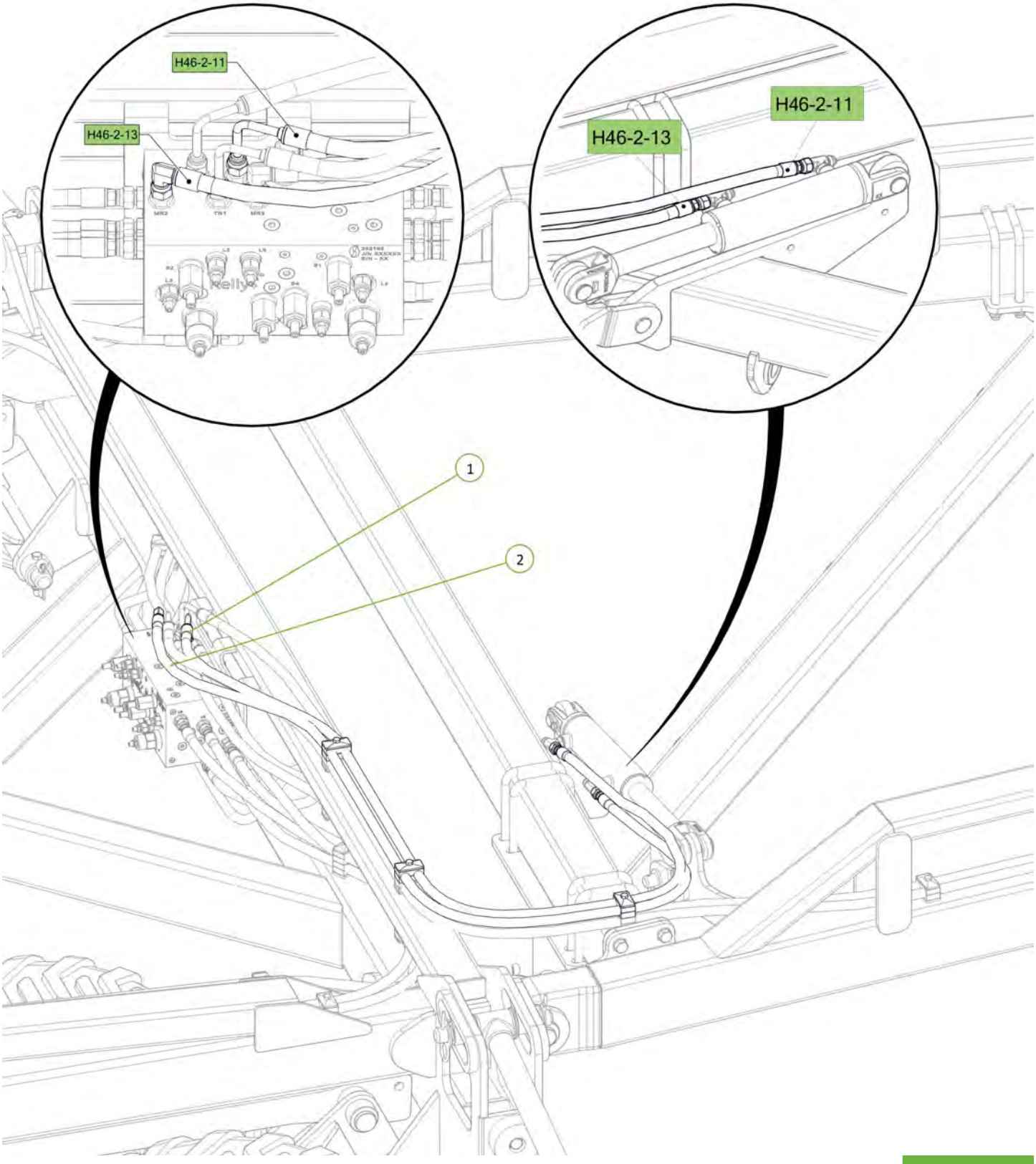

Item No.	Description	Number	Qty
1	LH Rear Module Extend Tee to RH Rear Module Cylinder Extend Port	H46-2-12	1
2	LH Rear Module Retract Tee to RH Rear Module Cylinder Retract Port	H46-2-14	1

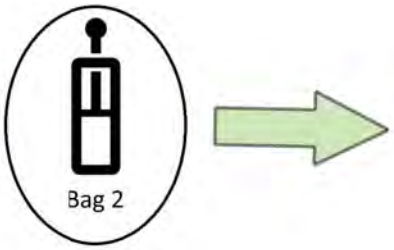

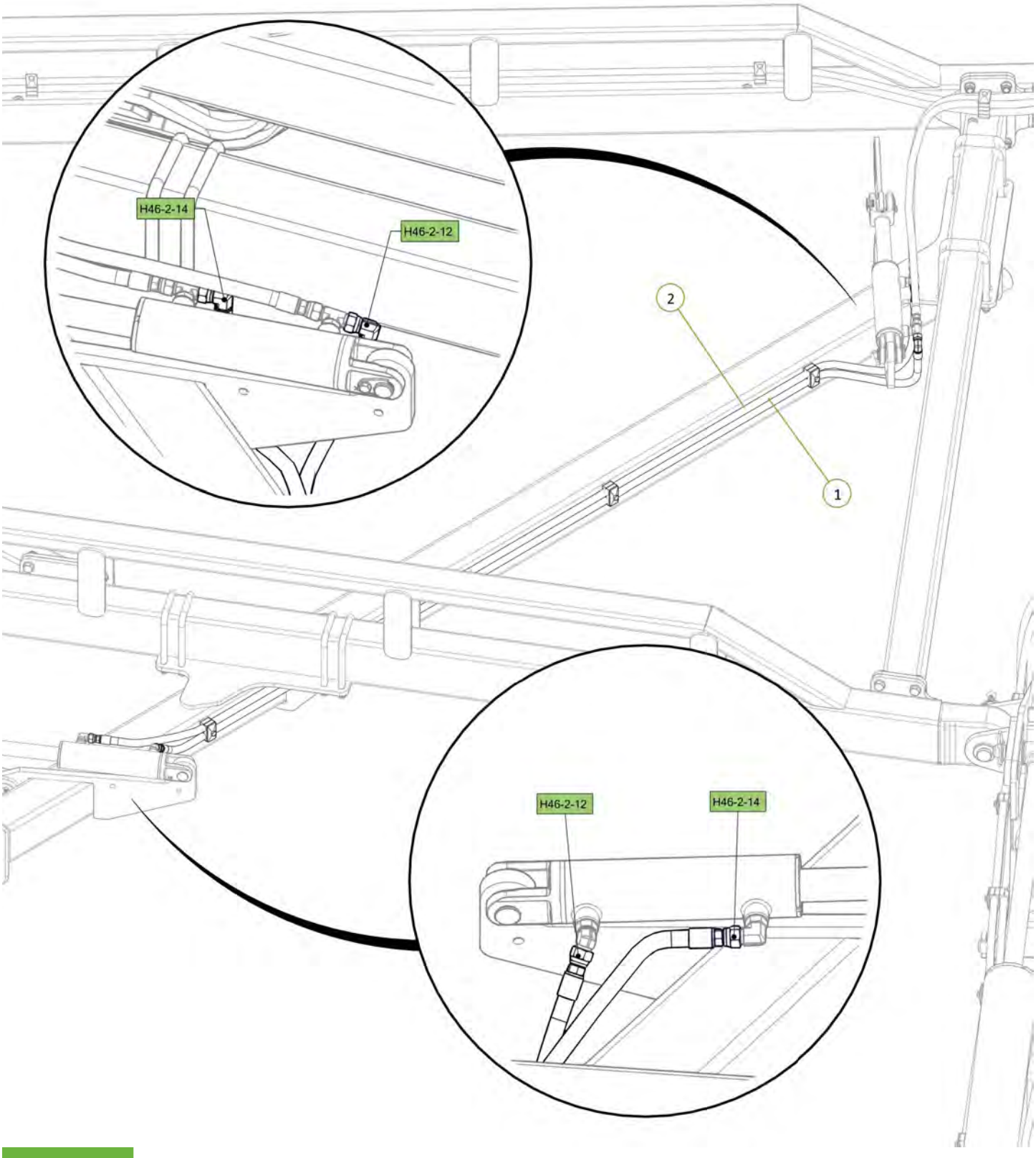

Item No.	Description	Number	Qty
1	46' Chain Carrier Beam	0810-17-45-46	1
2	Chain Carrier Mount Plate	0800-139.1	2
3	U-Bolt M16 x 162 Deep x 129 Wide	0271-16162129U	4
4	U-Bolt M16 x 114 Deep x 106 Wide	0271-16114106U	4
5	Washer Flat M16	0231-F16	16
6	Nyloc Nut M16	0221-NYL16	16

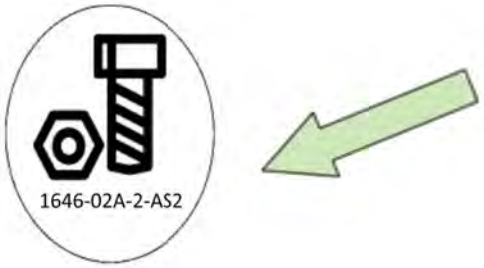

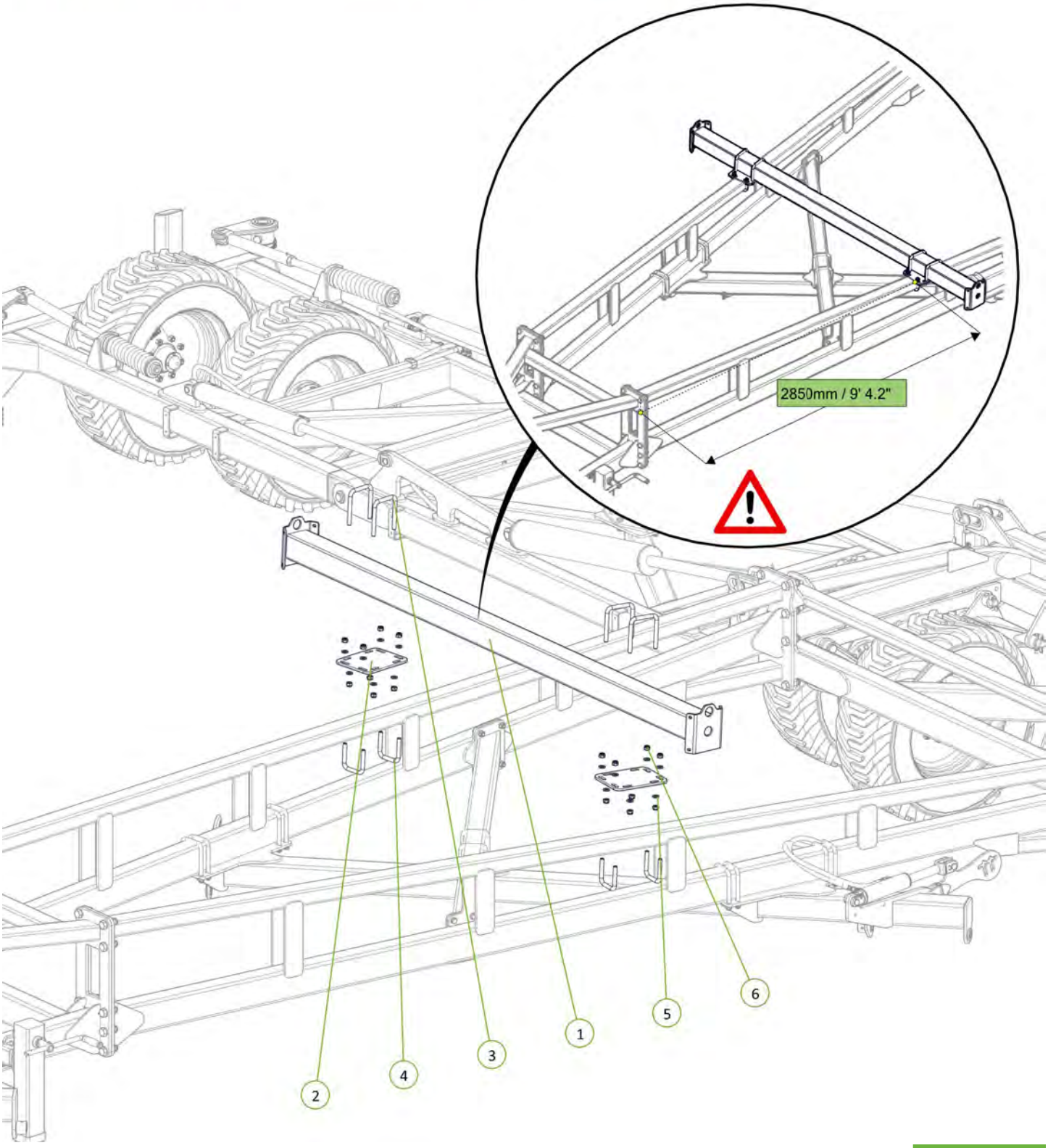

Item No.	Description	Number	Qty
1	Extended Chain Carrier Bolt on End	0810-17LE	2
2	M12 x 30 Coach Head Bolt	0215-CH1230	8
3	Washer Flat M12	0231-F12	8
4	Nyloc Nut M12	0221-NYL12	8

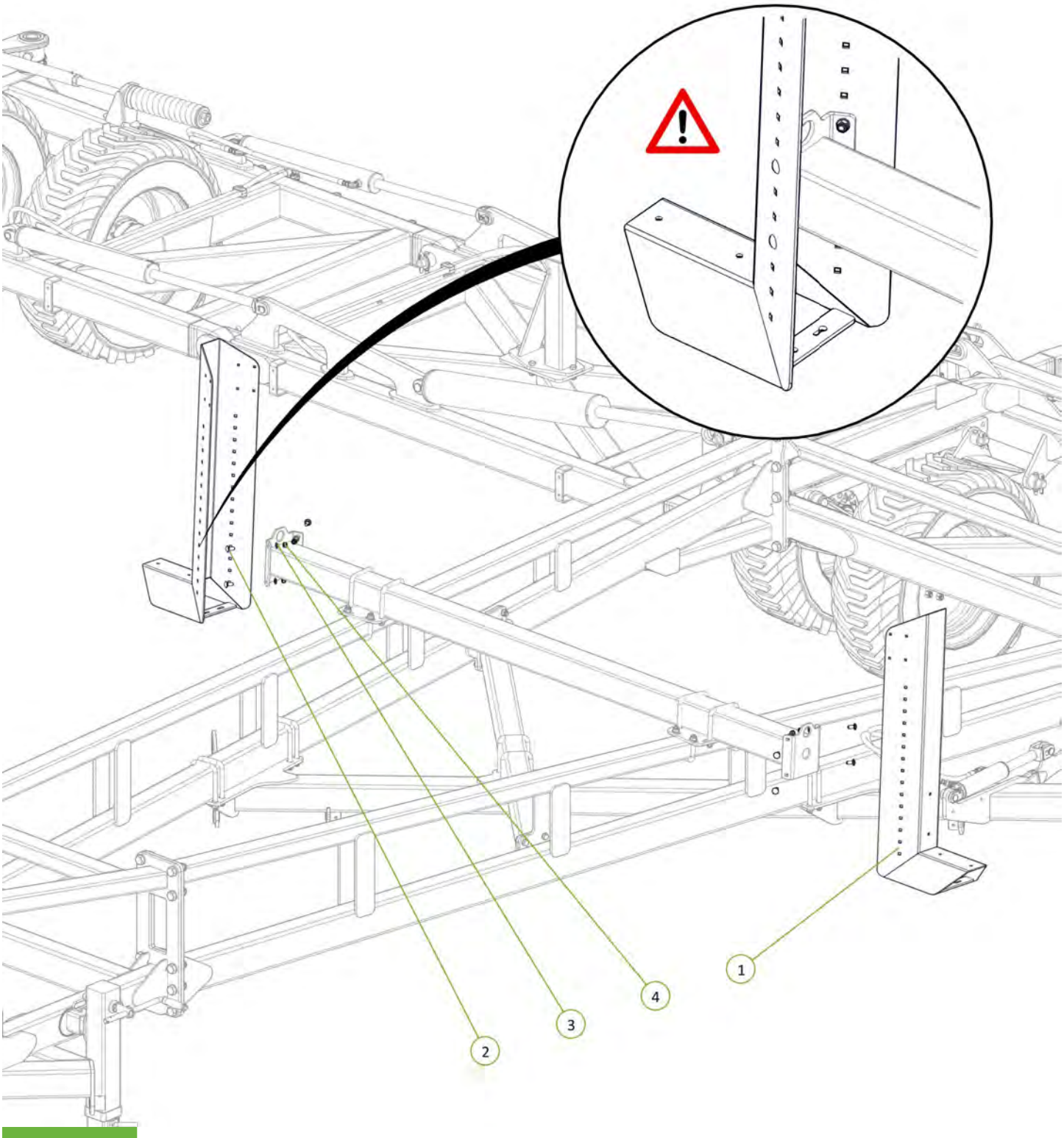

Item No.	Description	Number	Qty
1	46' Chain Carrier Beam	0810-17-45-46	1
2	300mm Chain Carrier Pedestal	1510-43	2
3	U-Bolt M16 x 104 Wide x 85 Deep	0271-1610686U	4
4	U-Bolt M16 x 162 Deep x 129 Wide	0271-16162129U	4
5	Washer Flat M16	0231-F16	16
6	Nyloc Nut M16	0221-NYL16	16

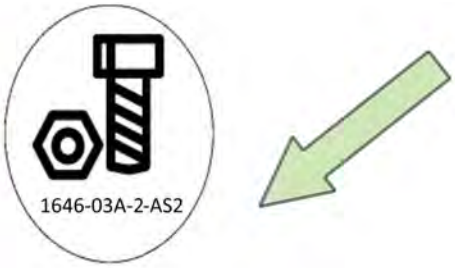

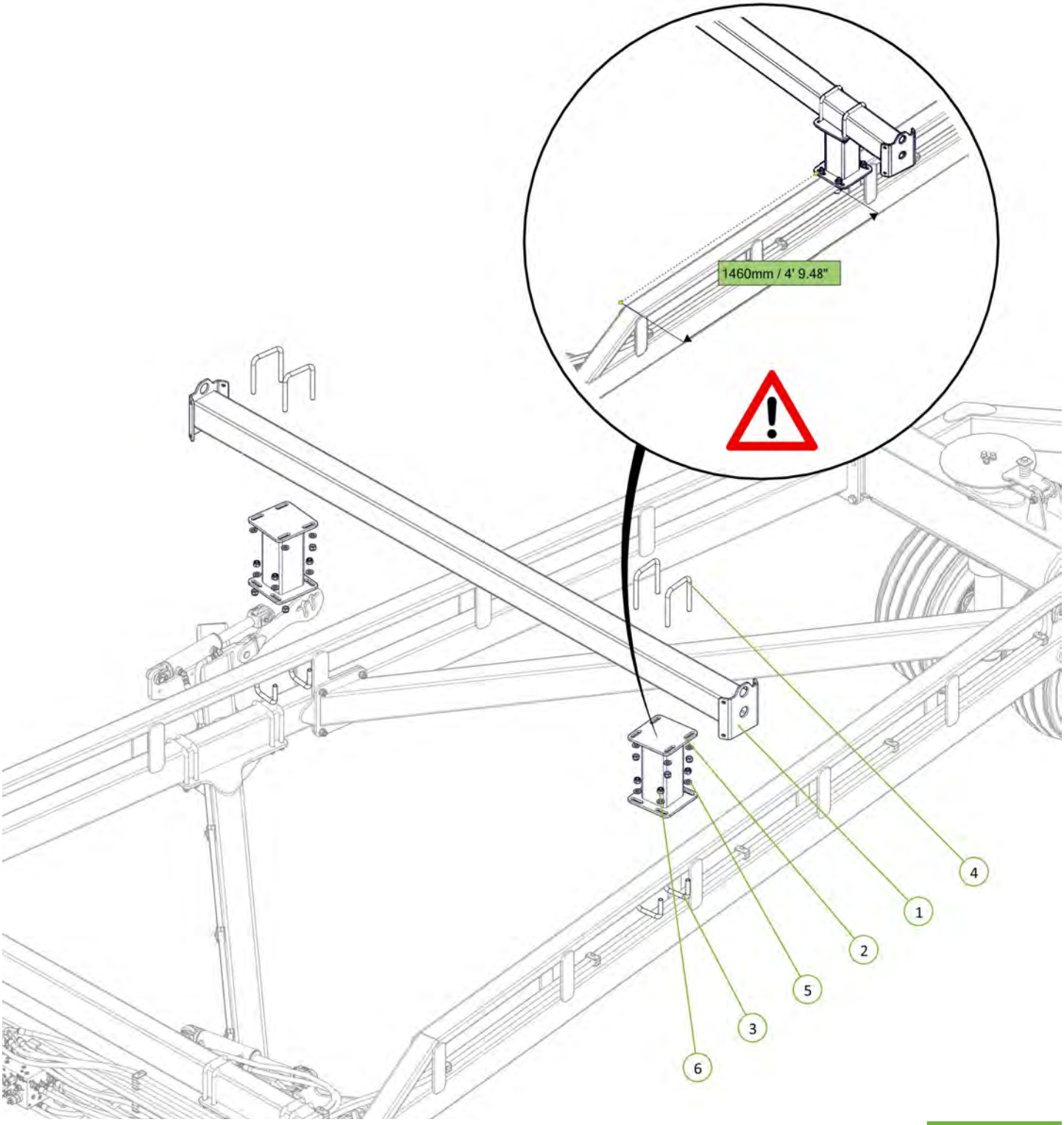

Item No.	Description	Number	Qty
1	Extended Chain Carrier Bolt on End	0810-17LE	2
2	M12 x 30 Coach Head Bolt	0215-CH1230	8
3	Washer Flat M12	0231-F12	8
4	Nyloc Nut M12	0221-NYL12	8

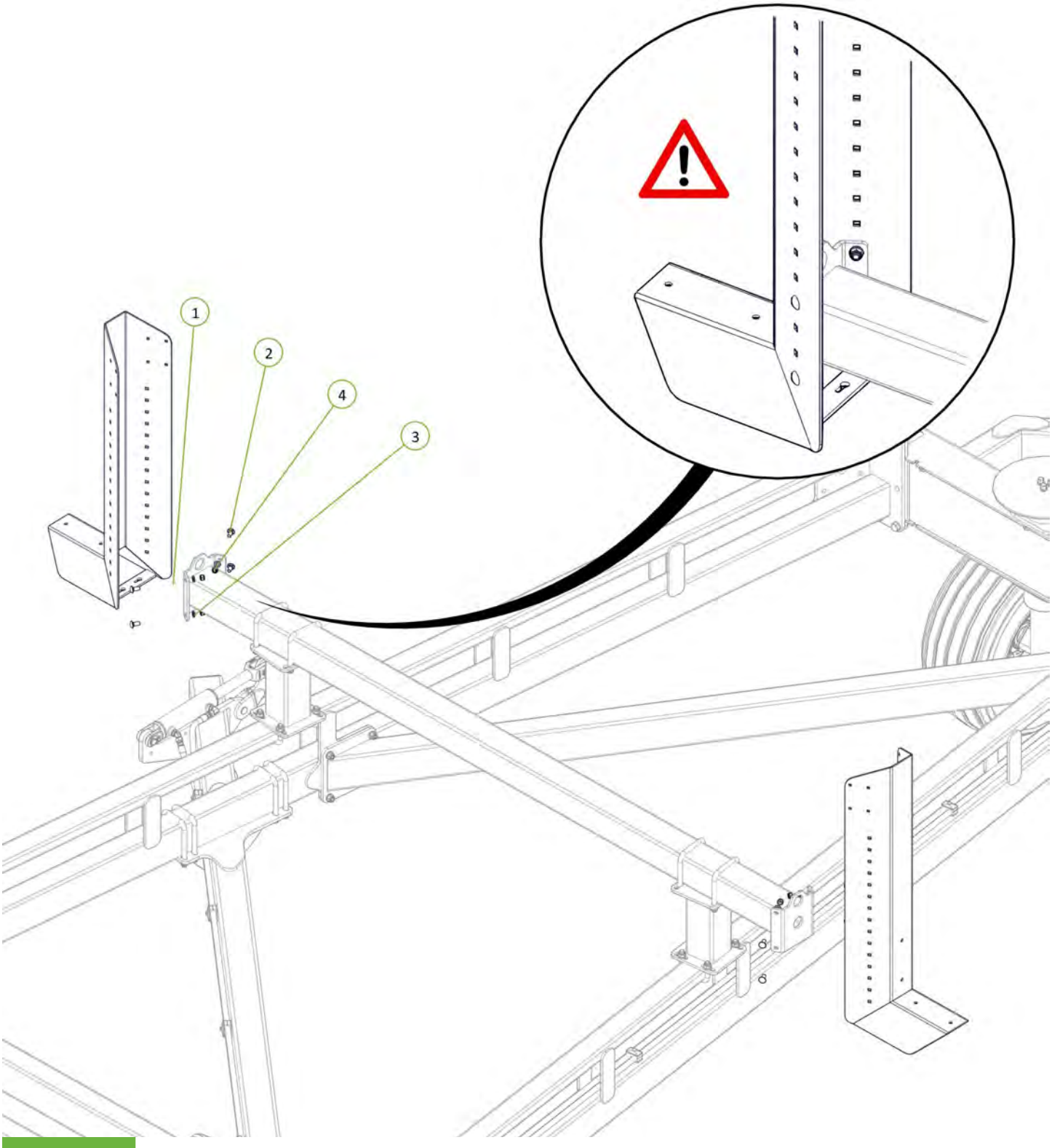

Item No.	Description	Number	Qty
1	46' Outrigger	1610-109	2
2	M16 x 50 grade 8.8 zp Bolt	0211-1650	8
3	Nyloc Nut M16	0221-NYL16	8
4	Washer Flat M16	0231-F16	16

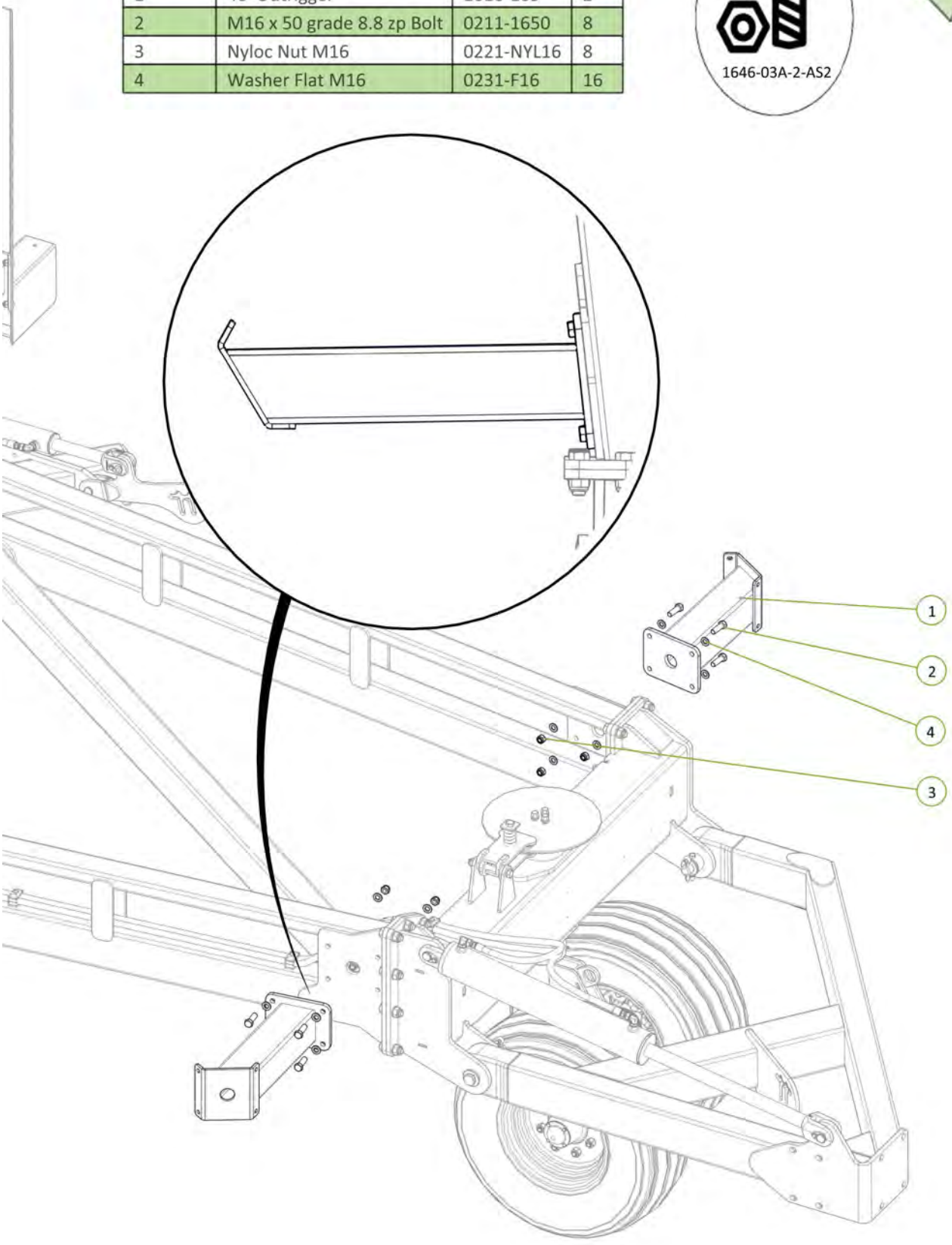

Item No.	Description	Number	Qty
1	Extended Chain Carrier Bolt on End	0810-17LE	2
2	M12 x 30 Coach Head Bolt	0215-CH1230	8
3	Washer Flat M12	0231-F12	8
4	Nyloc Nut M12	0221-NYL12	8

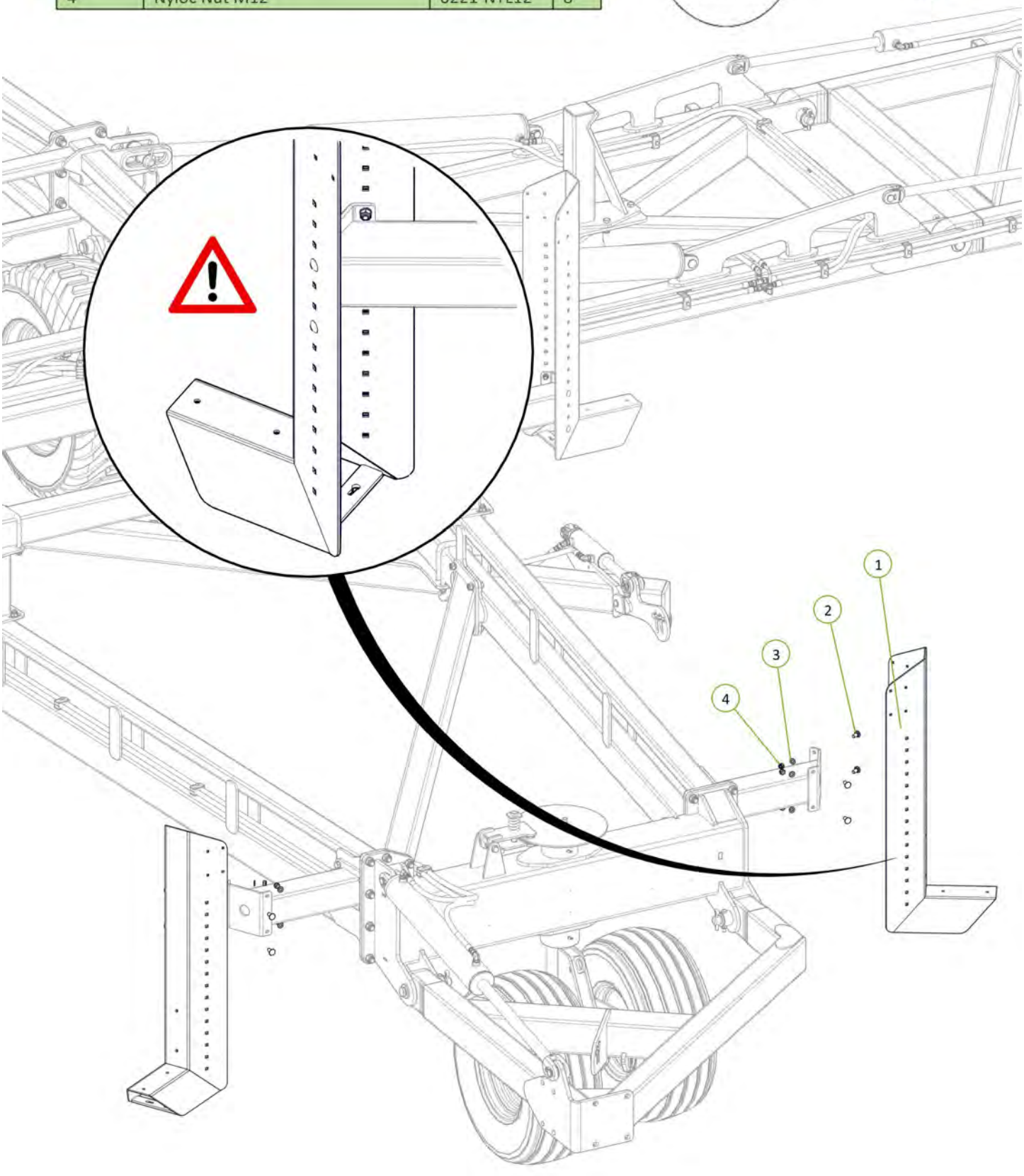

Item No.	Description	Number	Qty
1	Right Hand Off Set M	0810-18R	1
2	Left Hand Off Set M	0810-19L	1
3	Module M	1610-189	1
4	U-Bolt M12 x 106 Deep x 79 Wide	0271-1210679U	4
5	U-Bolt M12 x 157 Deep x 129 Wide	0271-12157129U	2
6	Round Tube Insert 60.3 x 3.2-5mm	0264-RTRi-5584	6
7	Washer Flat M12	0231-F12	12
8	Nyloc Nut M12	0221-NYL12	12

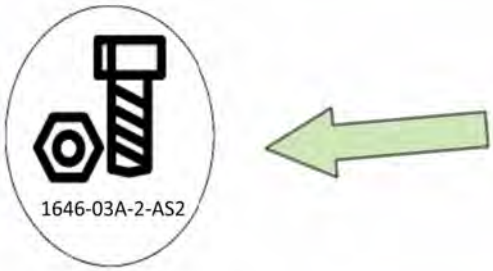

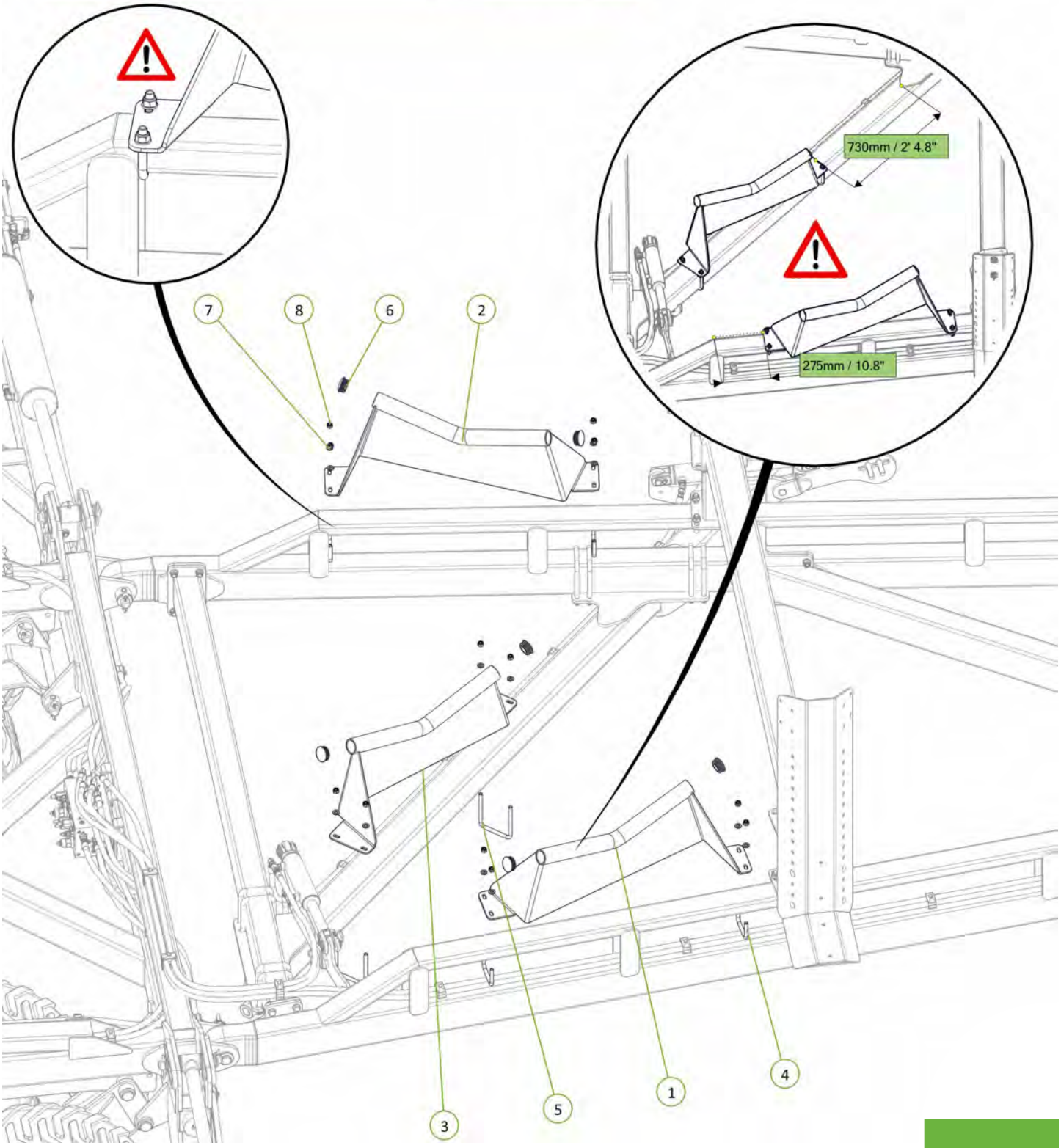

Item No.	Description	Number	Qty
1	Right Hand Off Set M	0810-18R	1
2	Left Hand Off Set M	0810-19L	1
3	Round Tube Insert 60.3 x 3.2-5mm	0264-RTRi-5584	4
4	U-Bolt M12 x 107 Deep x 106 Wide	0271-12107106U	4
5	Washer Flat M12	0231-F12	8
6	Nyloc Nut M12	0221-NYL12	8

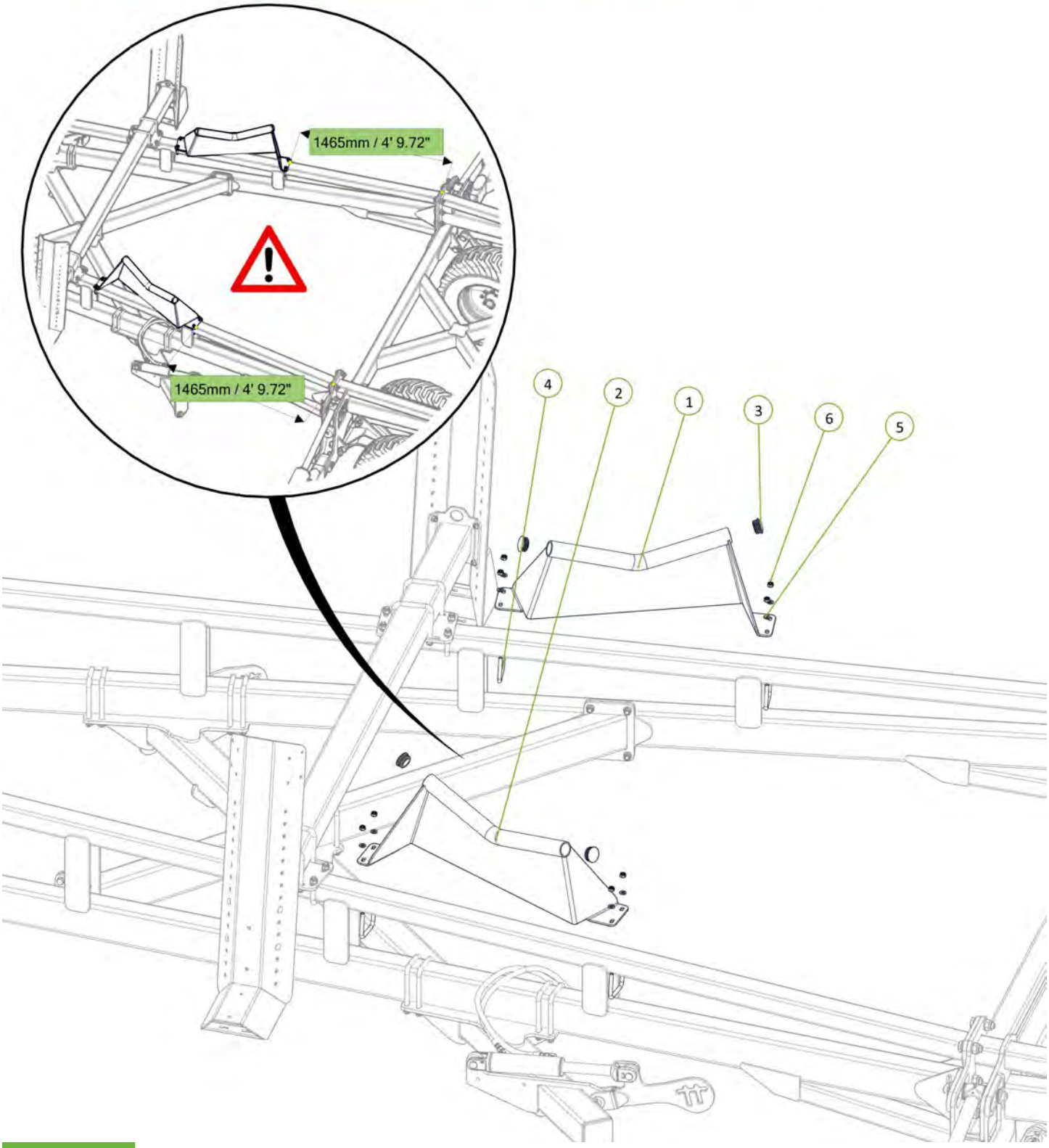

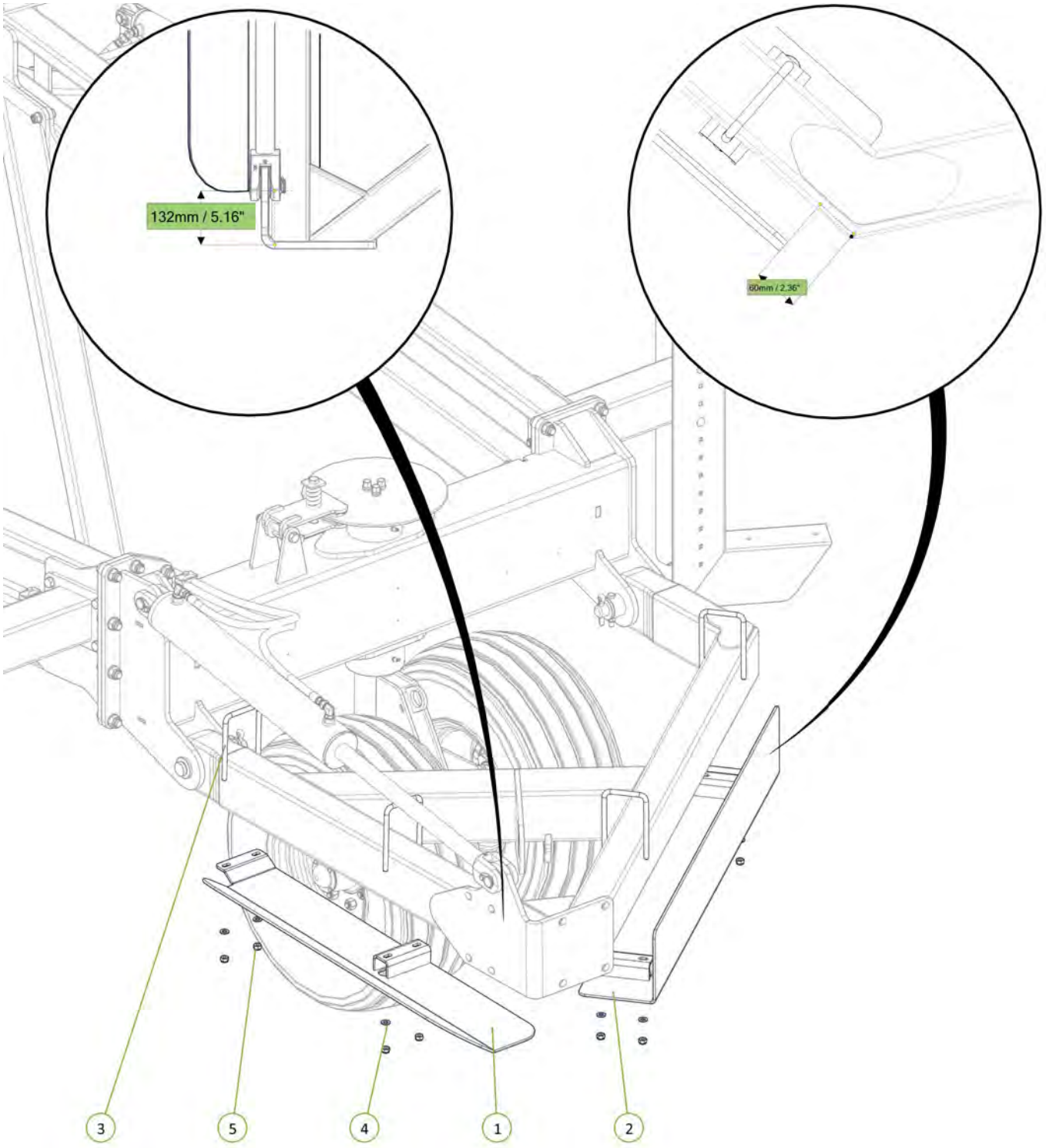

Item No.	Description	Number	Qty
1	Rear Guard 12m	1510-229	1
2	Rear Tail Guard	1610-188	1
3	U-Bolt M12 x 188 Deep x 106 Wide	0271-12188106U	4
4	Washer Flat M12	0231-F12	8
5	Nyloc Nut M12	0221-NYL12	8

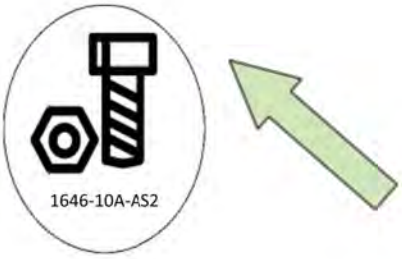

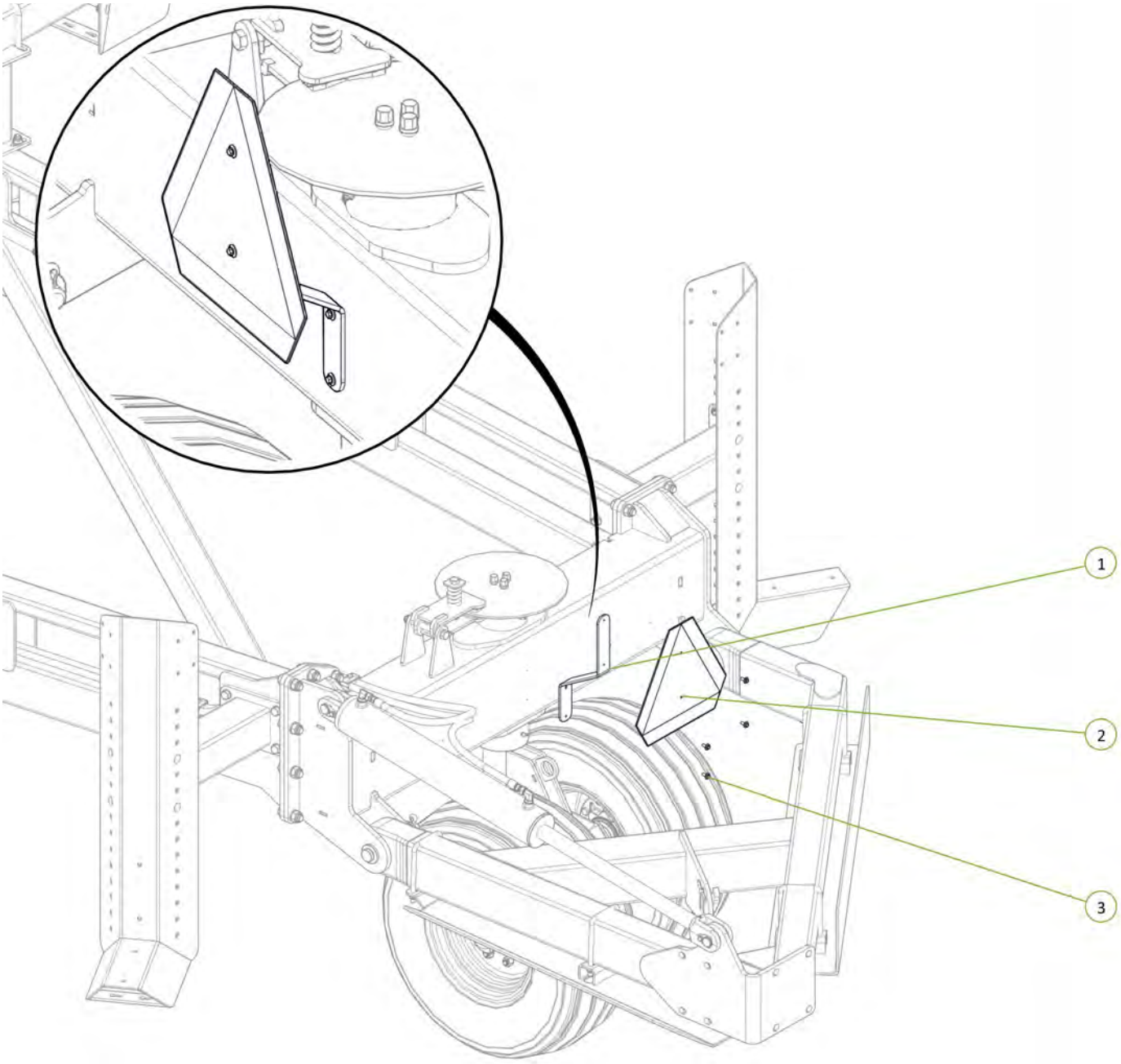

Item No.	Description	Number	Qty
1	SMV Sign Bracket	0800-195.1	1
2	Slow Moving Vehical Sign	0801-FBSMVTUF	1
3	M6 x 20 Trilobe self tapping Scew	0211-M620MZPHTF	4

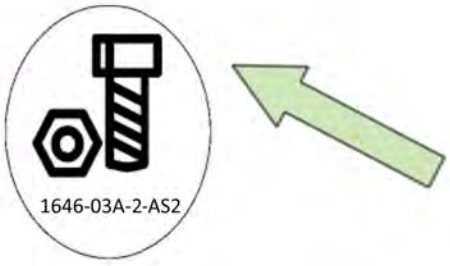

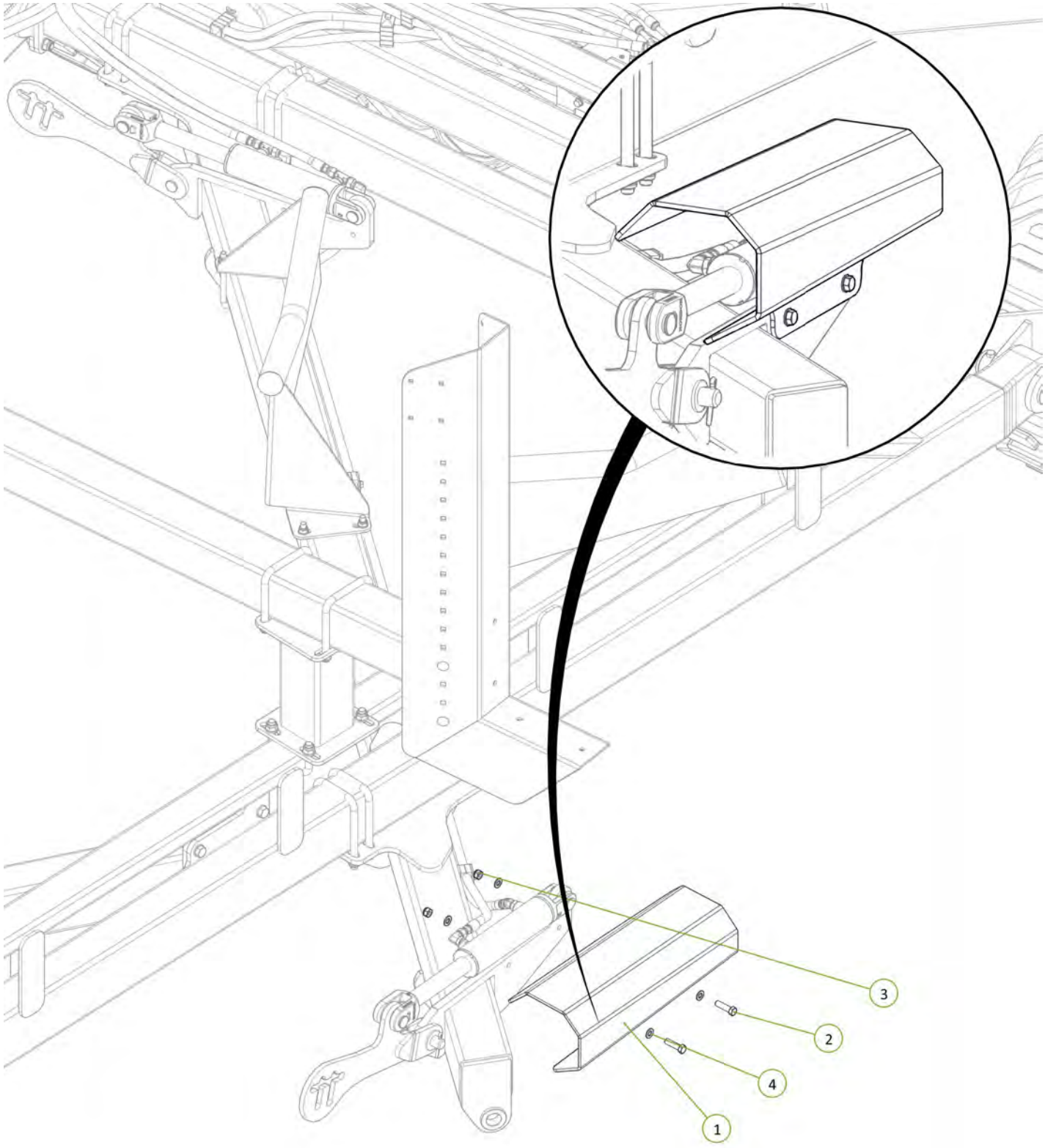

Item No.	Description	Number	Qty
1	Module Cylinder Guard	0800-167.3	1
2	M12 x 45 grade 8.8 ZP Bolt	0211-1245	2
3	Nyloc Nut M12	0221-NYL12	2
4	Washer Flat M12	0231-F12	4

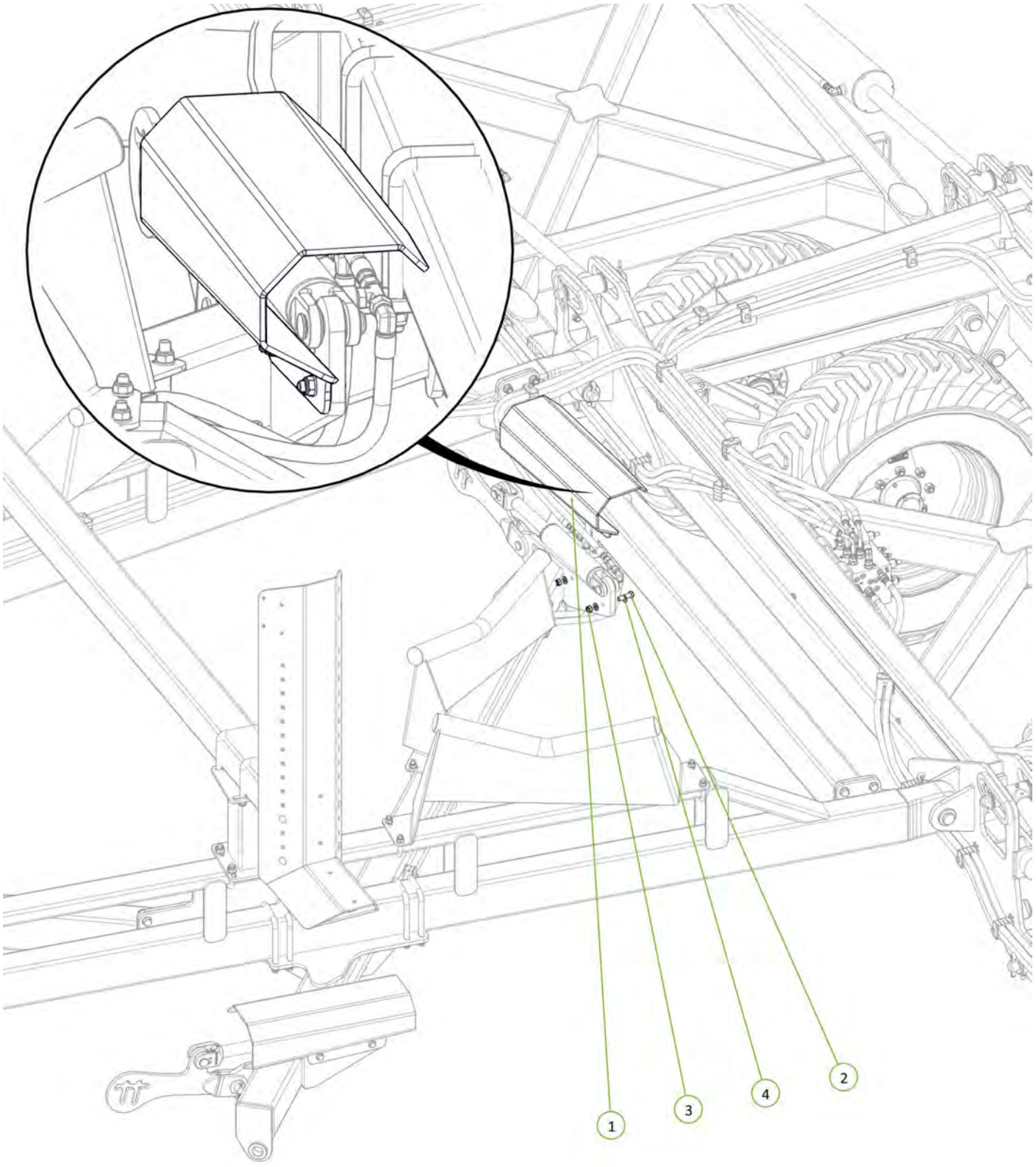

Item No.	Description	Number	Qty
1	Module Cylinder Guard	0800-167.3	1
2	M12 x 45 grade 8.8 ZP Bolt	0211-1245	2
3	Nyloc Nut M12	0221-NYL12	2
4	Washer Flat M12	0231-F12	4

Item No.	Description	Number	Qty
1	Operator Manual Cannister	0801-OMC-1	1
2	M8 x 25 grade 8.8 ZP Bolt	0211-825	3
3	Nyloc Nut M8	0221-NYL8	3
4	Washer Flat M8	0231-F8	6

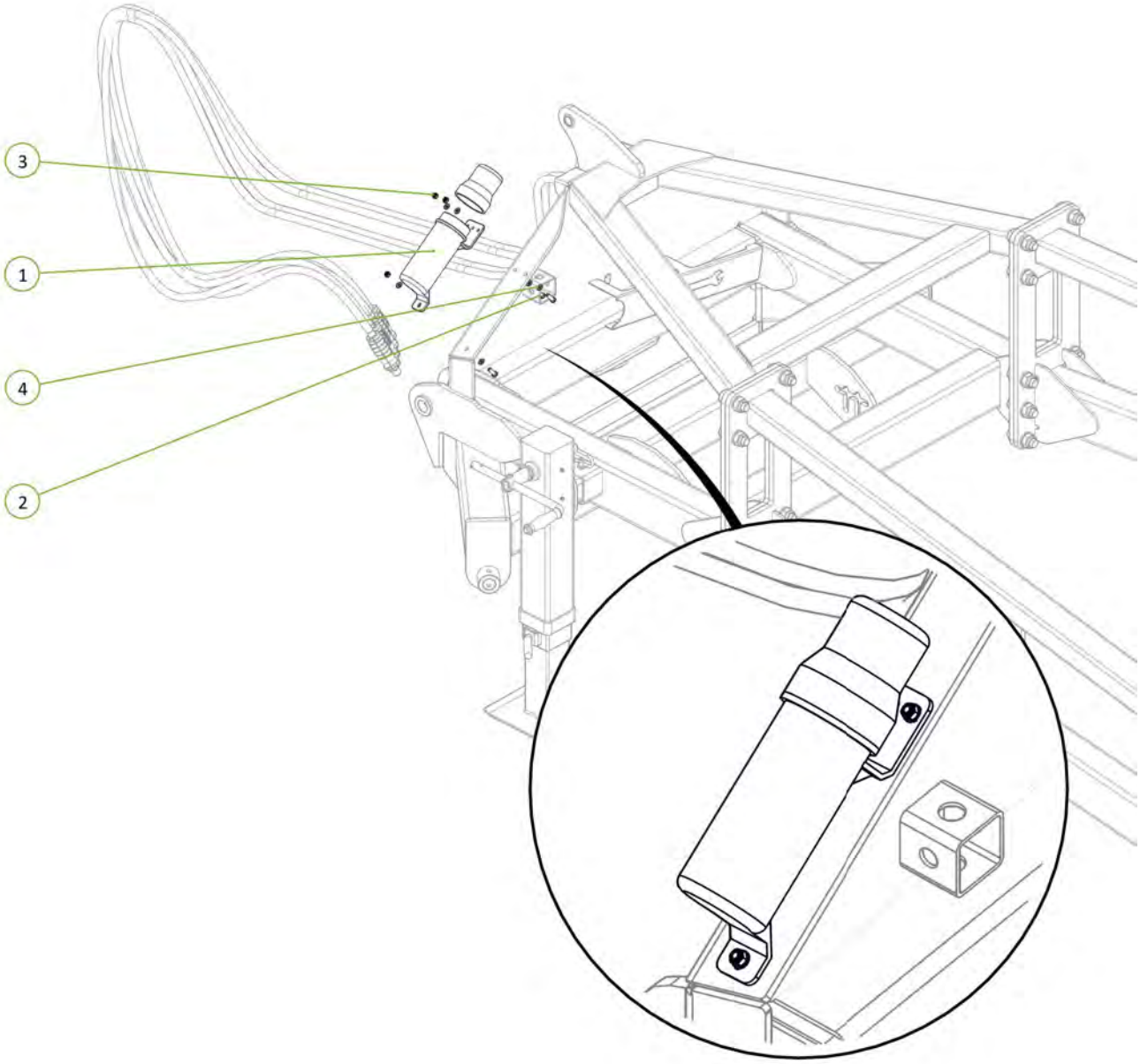

Item No.	Description	Number	Qty
1	Forged Clevis 21mm Bolt Hole	0801-FC21	2
2	Stainless Steel Wear Bush	1501-365033-SS	2
3	M36 x 105 grade 8.8 zp Bolt	0211-36105	2
4	Nyloc Nut M36	0221-NYL36	2

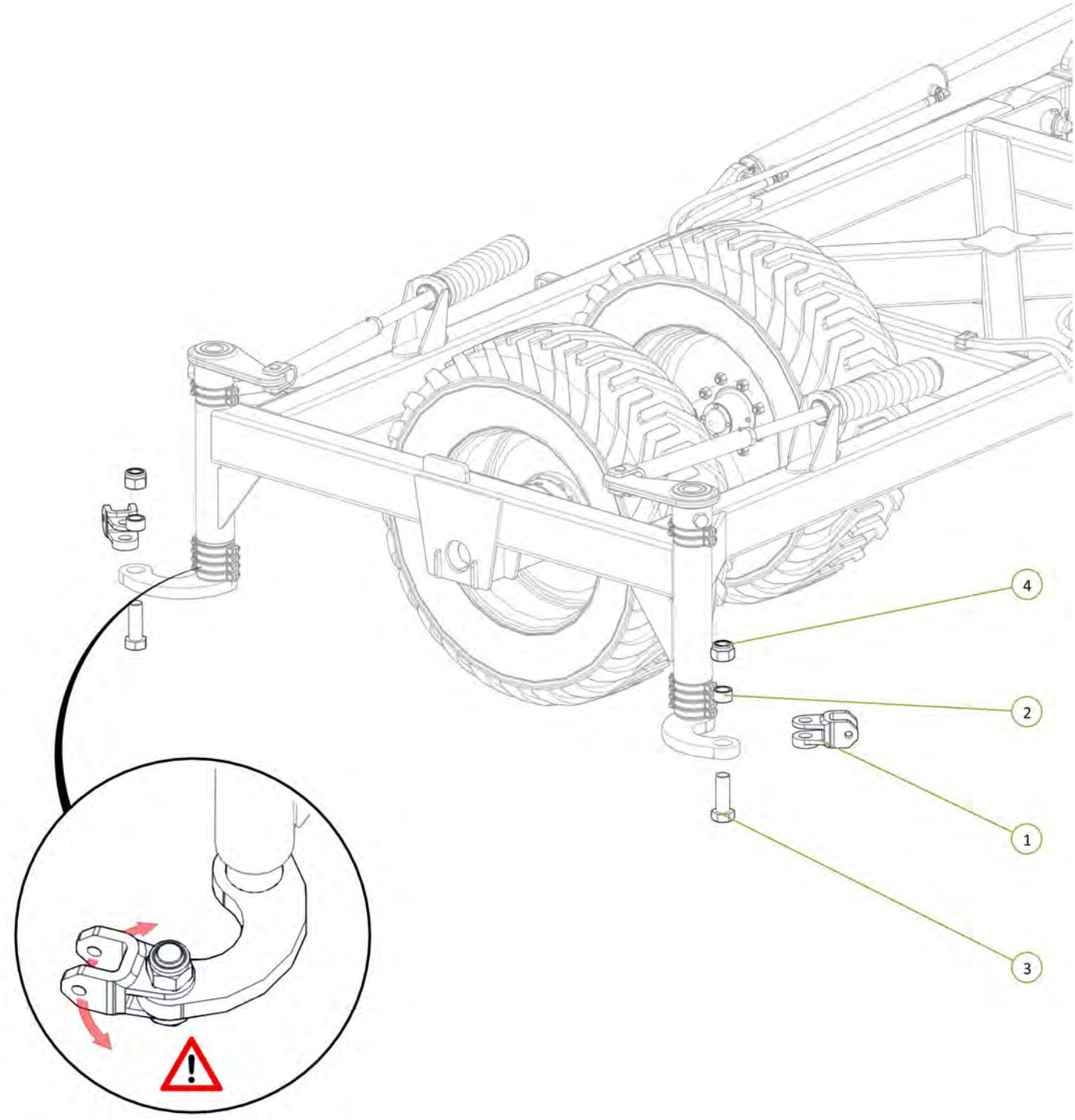

Ensure the clevis can pivot after installation

Item No.	Description	Number	Qty
1	Forged Clevis 21mm Bolt Hole	0801-FC21	2
2	Stainless Steel Wear Bush	1501-365033-SS	2
3	Nyloc Nut M36	0221-NYL36	2
4	M36 x 105 grade 8.8 zp Bolt	0211-36105	2

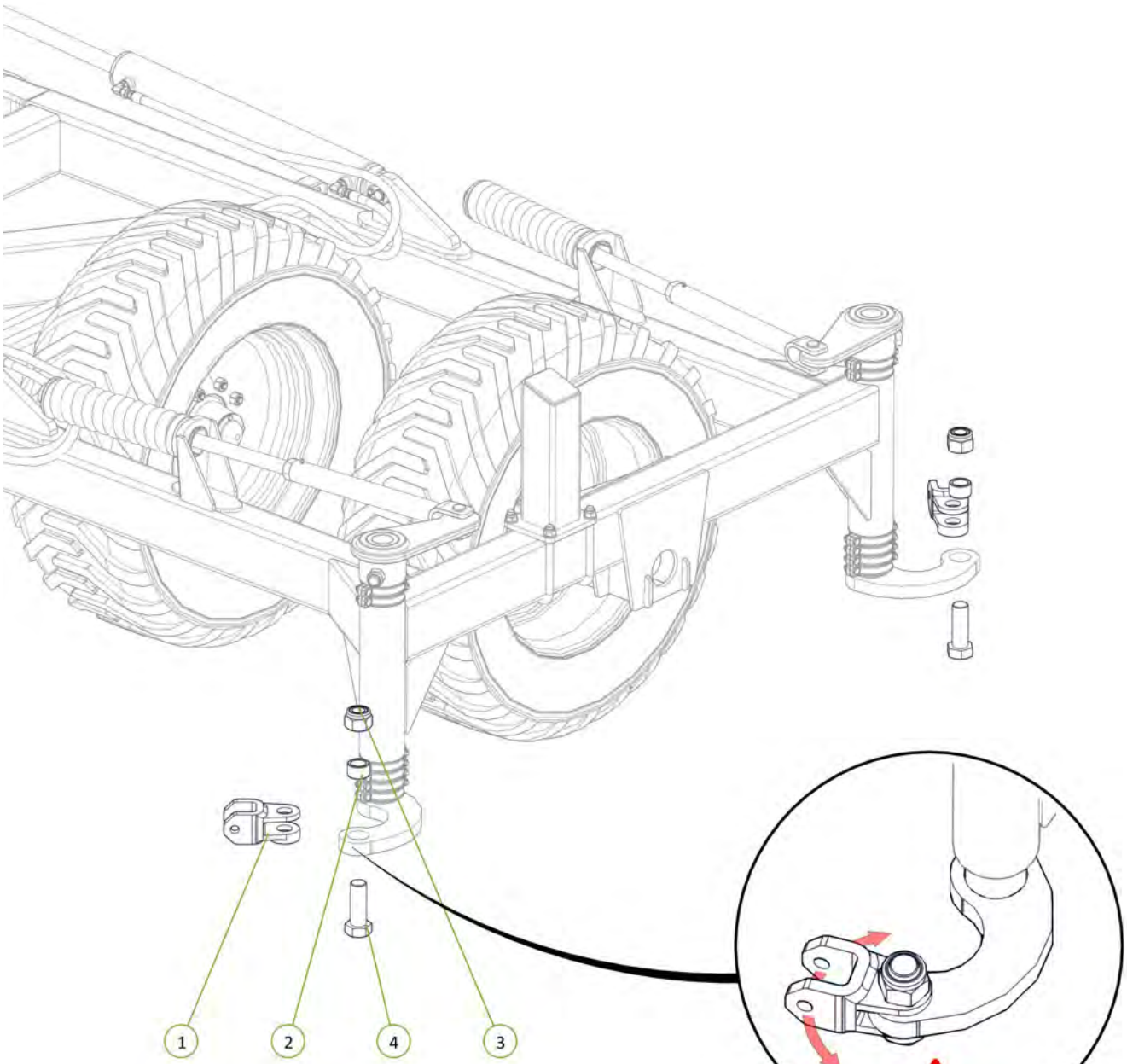

Ensure the clevis can pivot after installation

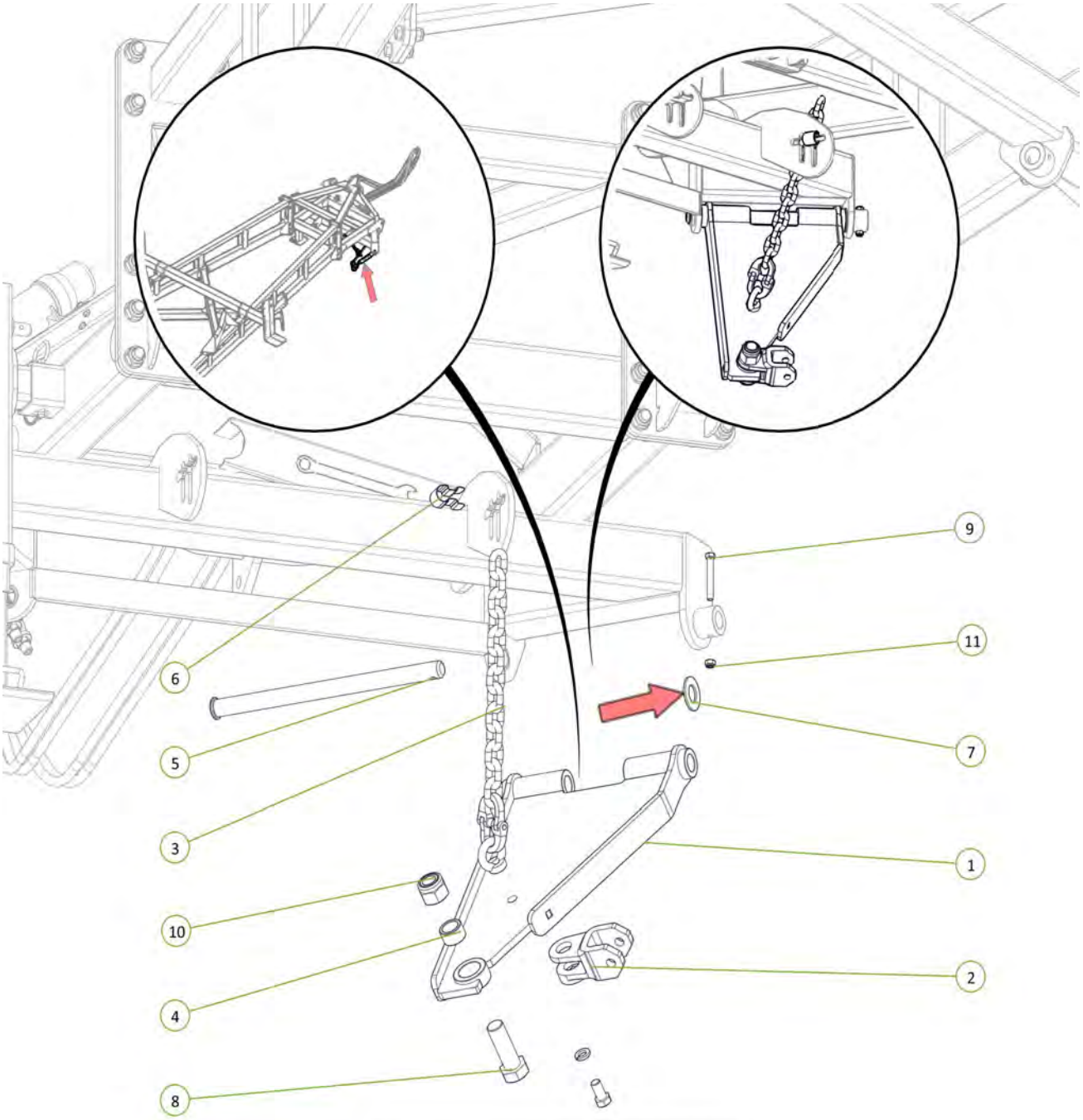

Ensure the clevis can pivot after installation

Item No.	Description	Number	Qty
1	Standard Chain Mount Plate	1610-20	1
2	Forged Clevis 21mm Bolt Hole	0801-FC21	1
3	Height Adjusting Chain Assembly 13 Link	0801-20MCA	1
4	Stainless Steel Wear Bush	1501-365033-SS	1
5	Chain Mount Pivot Pin	0801-10-51	1
6	Height Adjustor Retaining Clip	0801-KE014	1
7	Washer High Tensile 1 3/8"	0232-HT13-8	1
8	M36 x 105 grade 8.8 zp Bolt	0211-36105	1
9	M12 x 90 Class 10.9 ZP Bolt	0211-1290HT	1
10	Nyloc Nut M36	0221-NYL36	1
11	Nyloc Nut M12	0221-NYL12	1

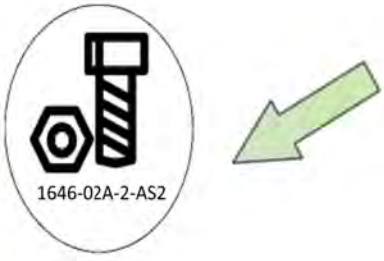

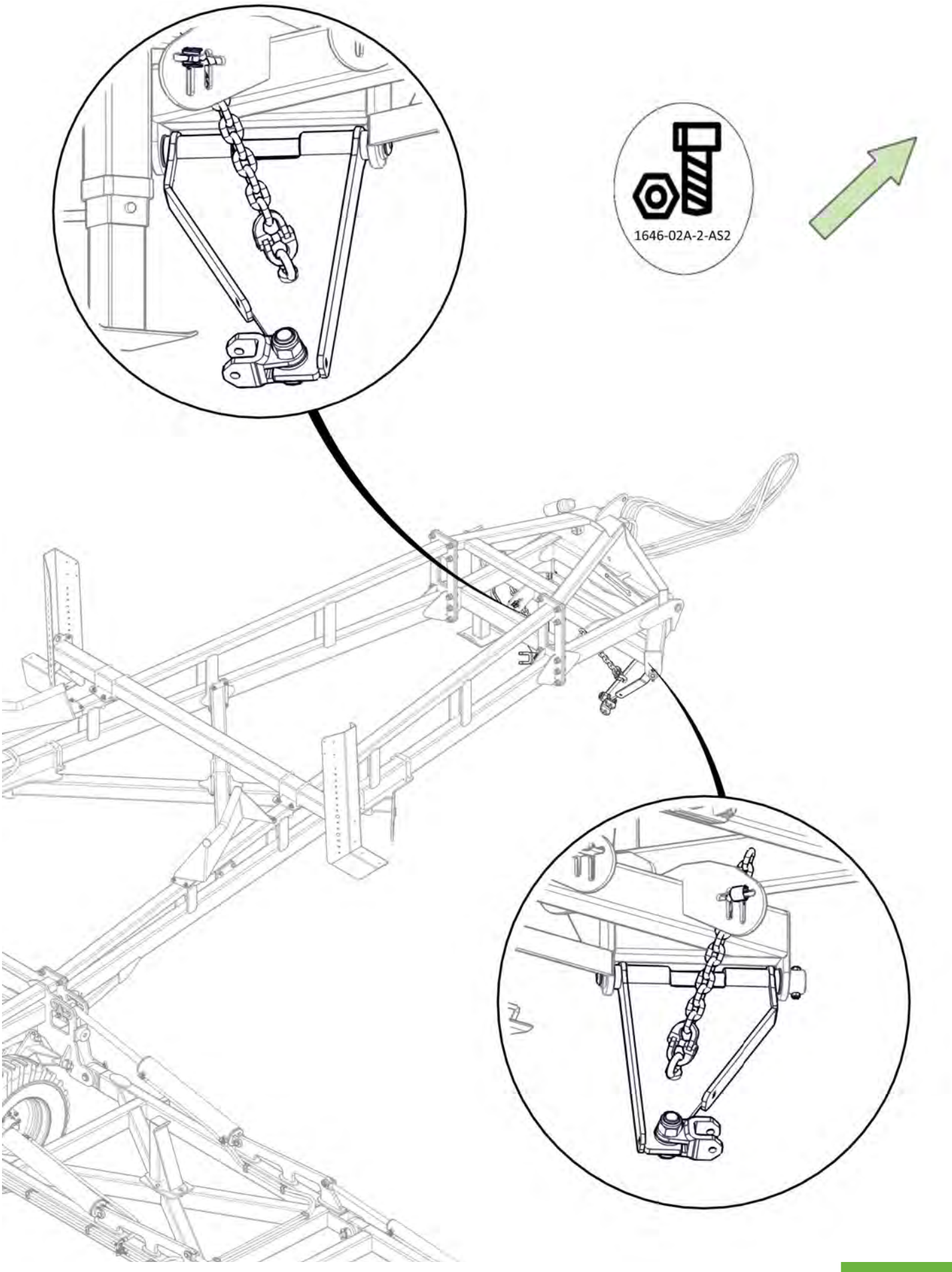
1646-02A-2-AS2

Item No.	Description	Number	Qty
1	Tension Box	0810-57	1
2	Module Tension Rod Assembly	0810-105A	1
3	Heavy Duty Coil Spring 24mm	0801-K2455350	1
4	Rigid Spring Locator	0801-10-S2L	1
5	Height Adjusting Chain Assembly 13 Link	0801-20MCA	1
6	Washer High Tensile 1 1/4"	0232-HT11-4	1
7	Washer Flat 1"	0232-F1	1

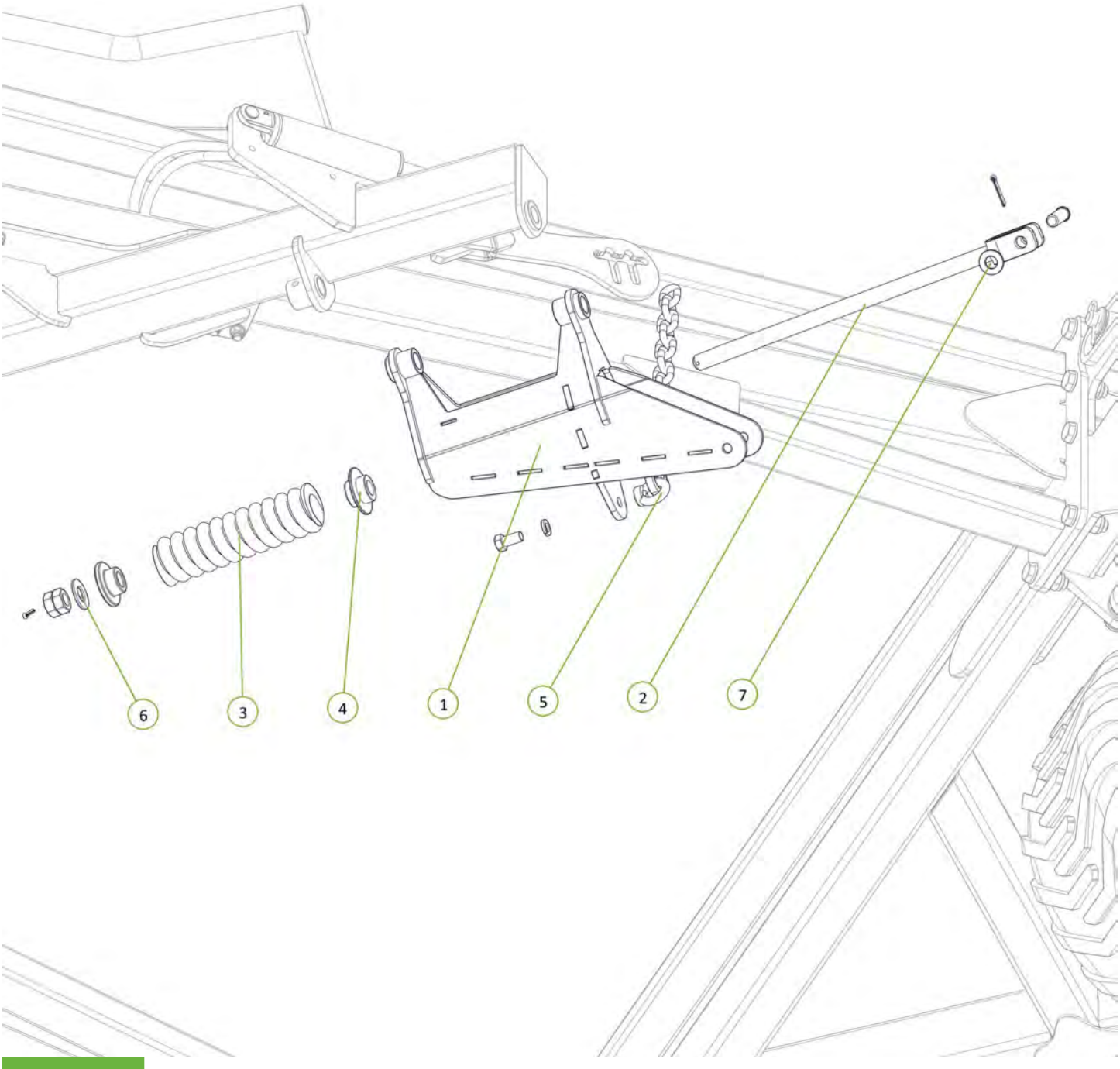

Item No.	Description	Number	Qty
1	Module Tension Arm No Clevis	0810-104	1
2	Forged Clevis 21mm Bolt Hole	0801-FC21	1
3	M36 x 105 Class 8.8 ZP Bolt	0211-36105	1
4	Module Pivot Arm Bush	0801-10-110	1
5	Nyloc Nut M36	0221-NYL36	1
6	M20 x 160 Grade 8.8 ZP Bolt	0211-20160	1
7	Nyloc Nut M20	0221-NYL20	1
8	Wear Bush	1501-365033-SS	1
9	35 ID x 50mm DU Bush	0113-MB3550DU	2
10	Washer Flat M20	0231-F20	2

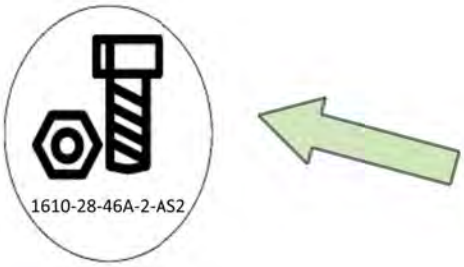

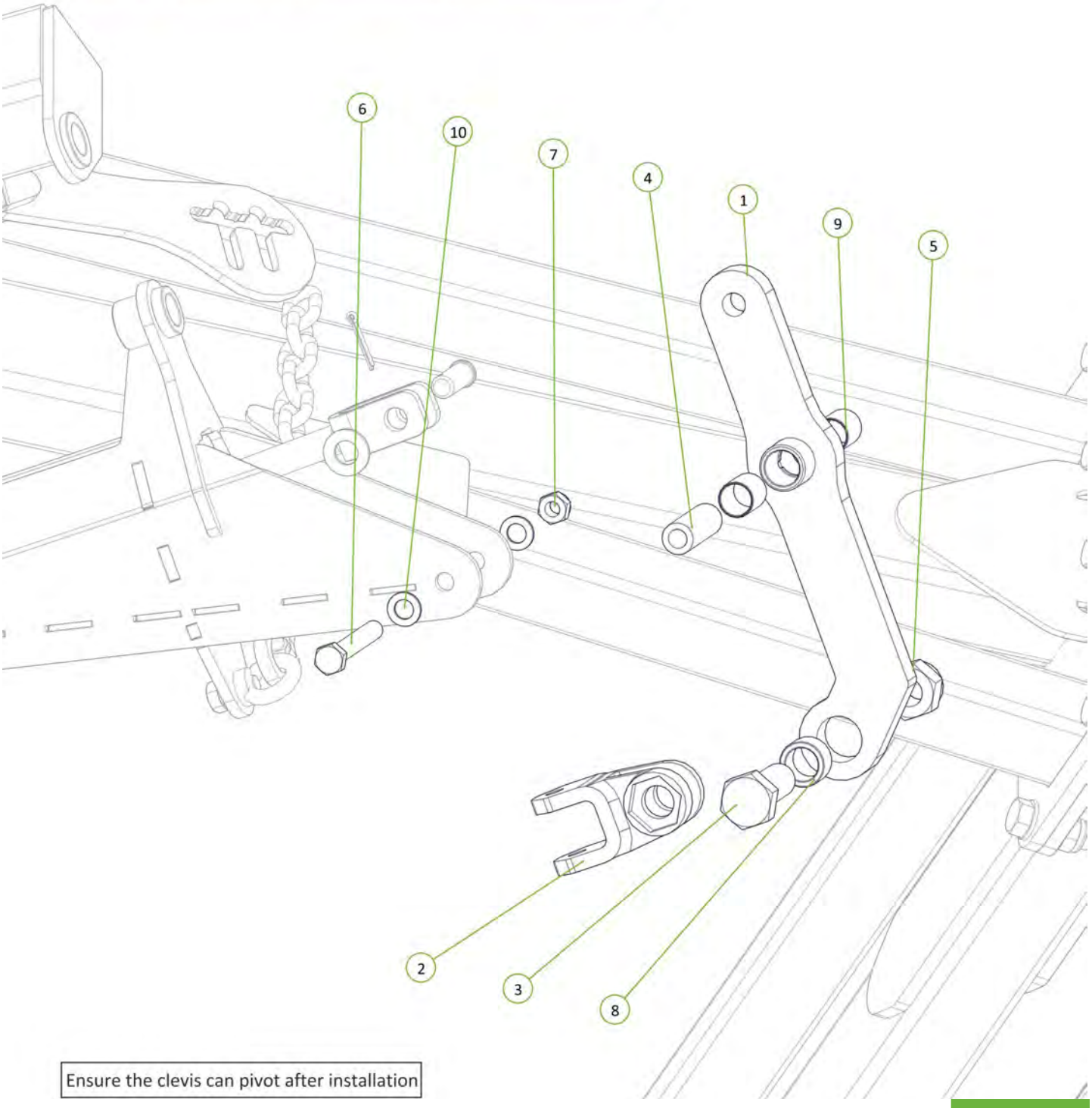

Ensure the clevis can pivot after installation

Item No.	Description	Number	Qty
1	Chain Mount Pivot Pin	0801-10-51	1
2	M12 x 90 Class 10.9 ZP Bolt	0211-1290HT	1
3	Nyloc Nut M12	0221-NYL12	1
4	Washer High Tensile 1 3/8"	0232-HT13-8	1
5	Height Adjustor Retaining Clip	0801-KE014	1

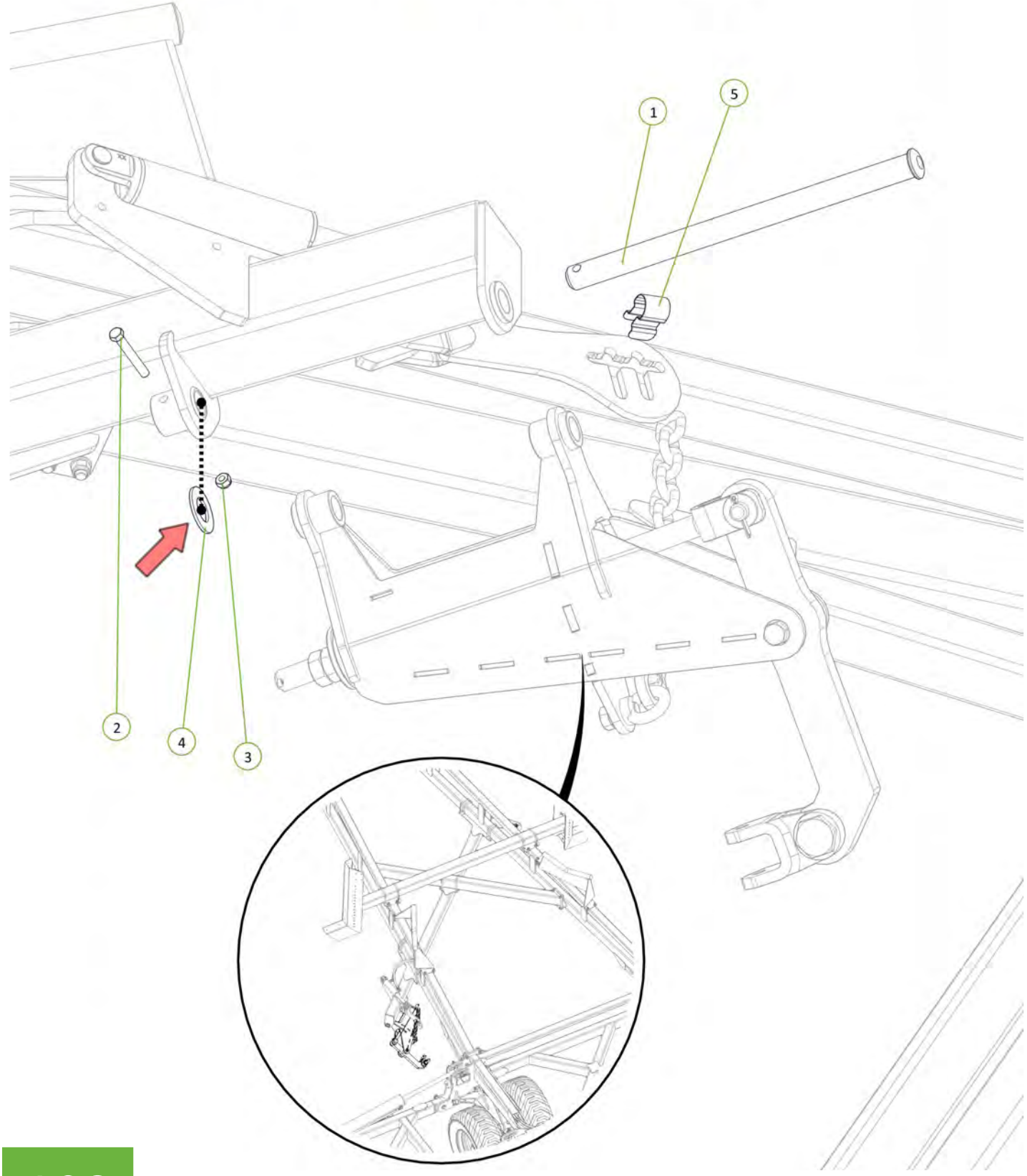

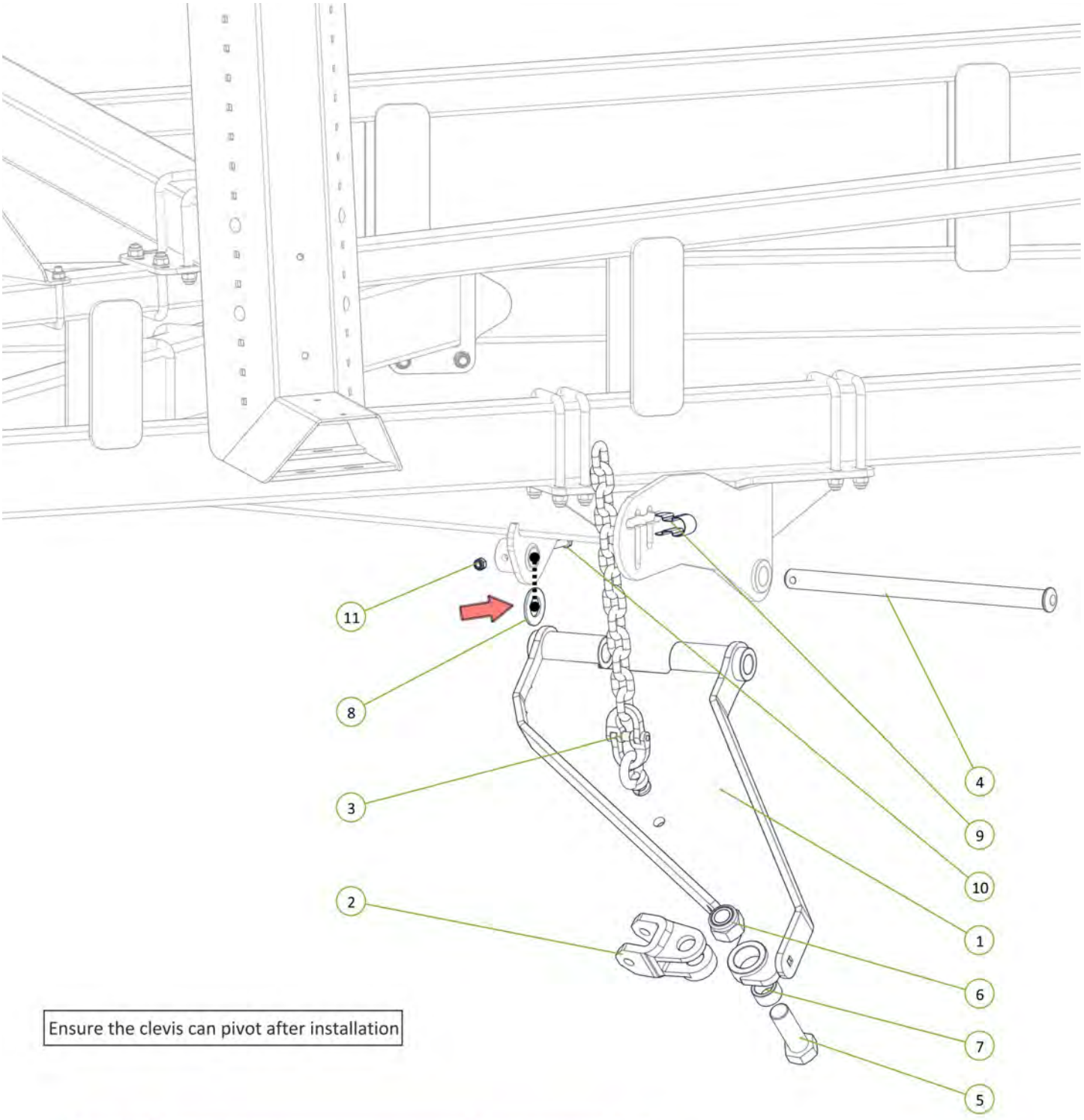

Ensure the clevis can pivot after installation

Item No.	Description	Number	Qty
1	Extended Chain Mount Plate	1610-21	1
2	Forged Clevis 21mm Bolt Hole	0801-FC21	1
3	Height Adjusting Chain Assembly 13 Link	0801-20MCA	1
4	Chain Mount Pivot Pin	0801-10-51	1
5	M36 x 105 Class 8.8 ZP Bolt	0211-36105	1
6	Nyloc Nut M36	0221-NYL36	1
7	Wear Bush	1501-365033-SS	1
8	Washer High Tensile 1 3/8"	0232-HT13-8	1
9	Height Adjustor Retaining Clip	0801-KE014	1
10	M12 x 90 Class 10.9 ZP Bolt	0211-1290HT	1
11	Nyloc Nut M12	0221-NYL12	1

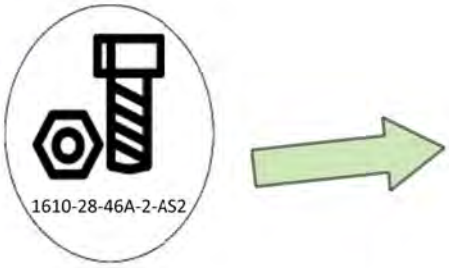

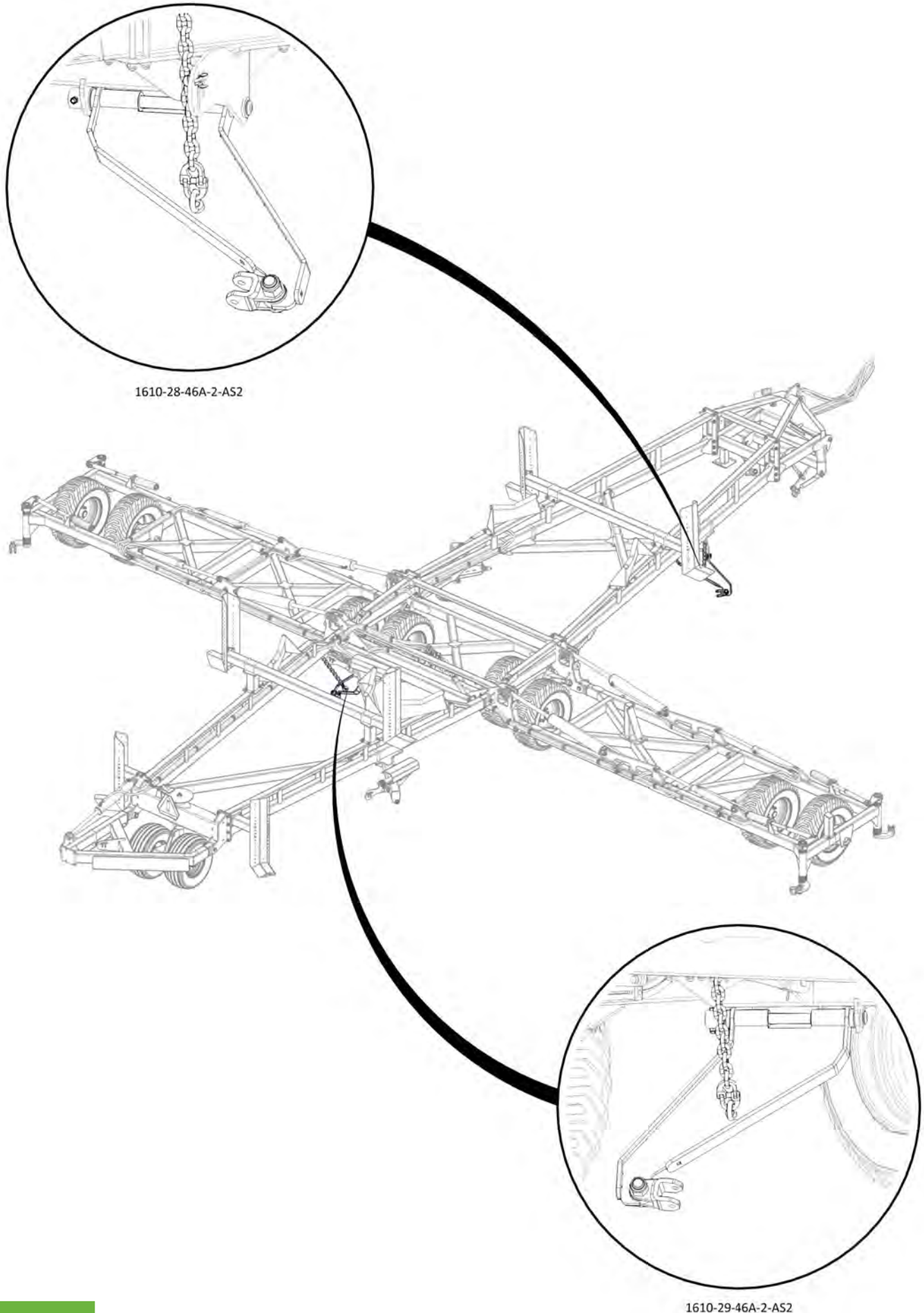

1610-28-46A-2-AS2

1610-29-46A-2-AS2

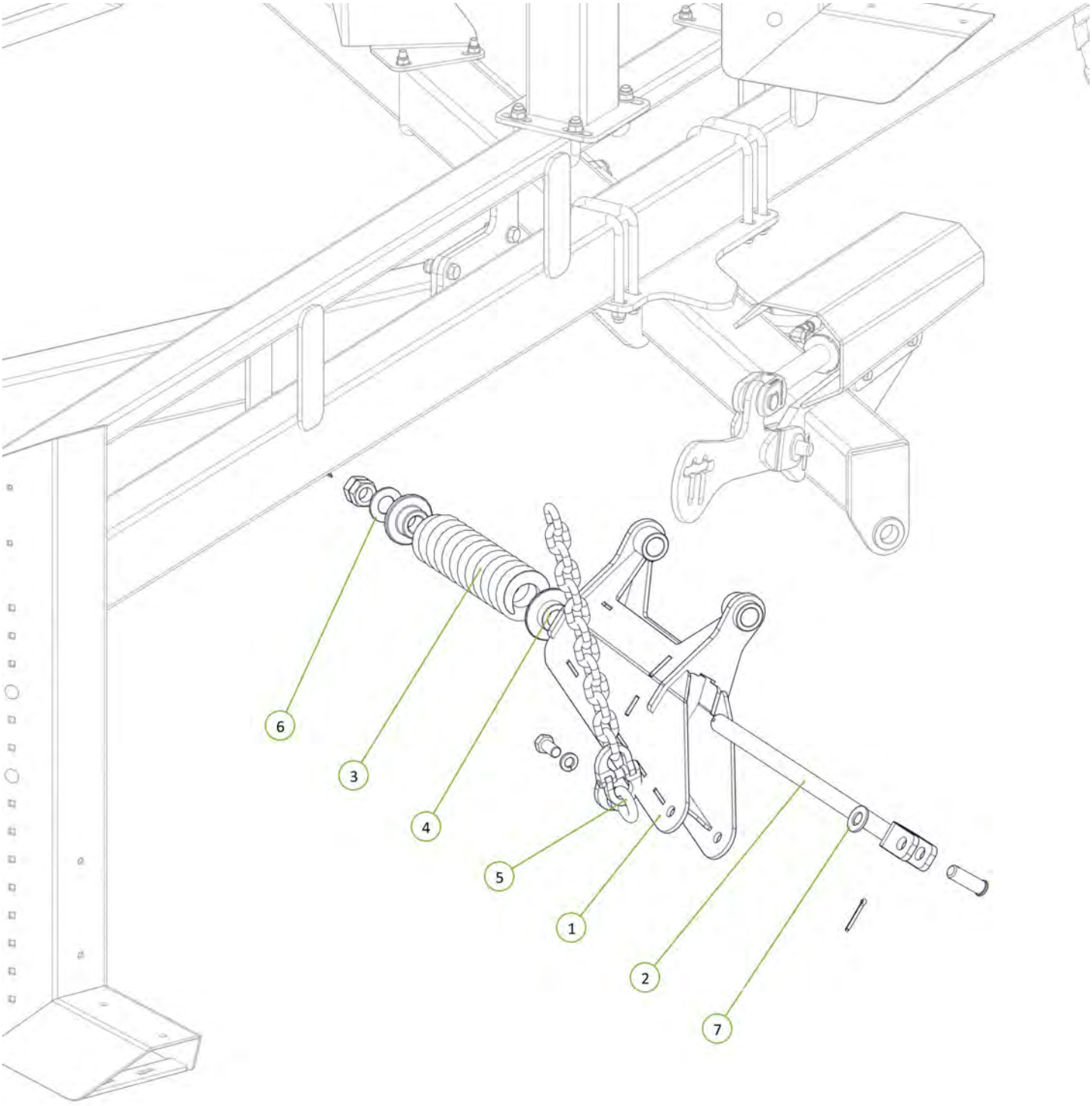

Item No.	Description	Number	Qty
1	Tension Box	0810-57	1
2	Module Tension Rod Assembly	0810-105A	1
3	Heavy Duty Coil Spring 24mm	0801-K2455350	1
4	Rigid Spring Locator	0801-10-S2L	1
5	Height Adjusting Chain Assembly 13 Link	0801-20MCA	1
6	Washer High Tensile 1 1/4"	0232-HT11-4	1
7	Washer Flat 1"	0232-F1	1

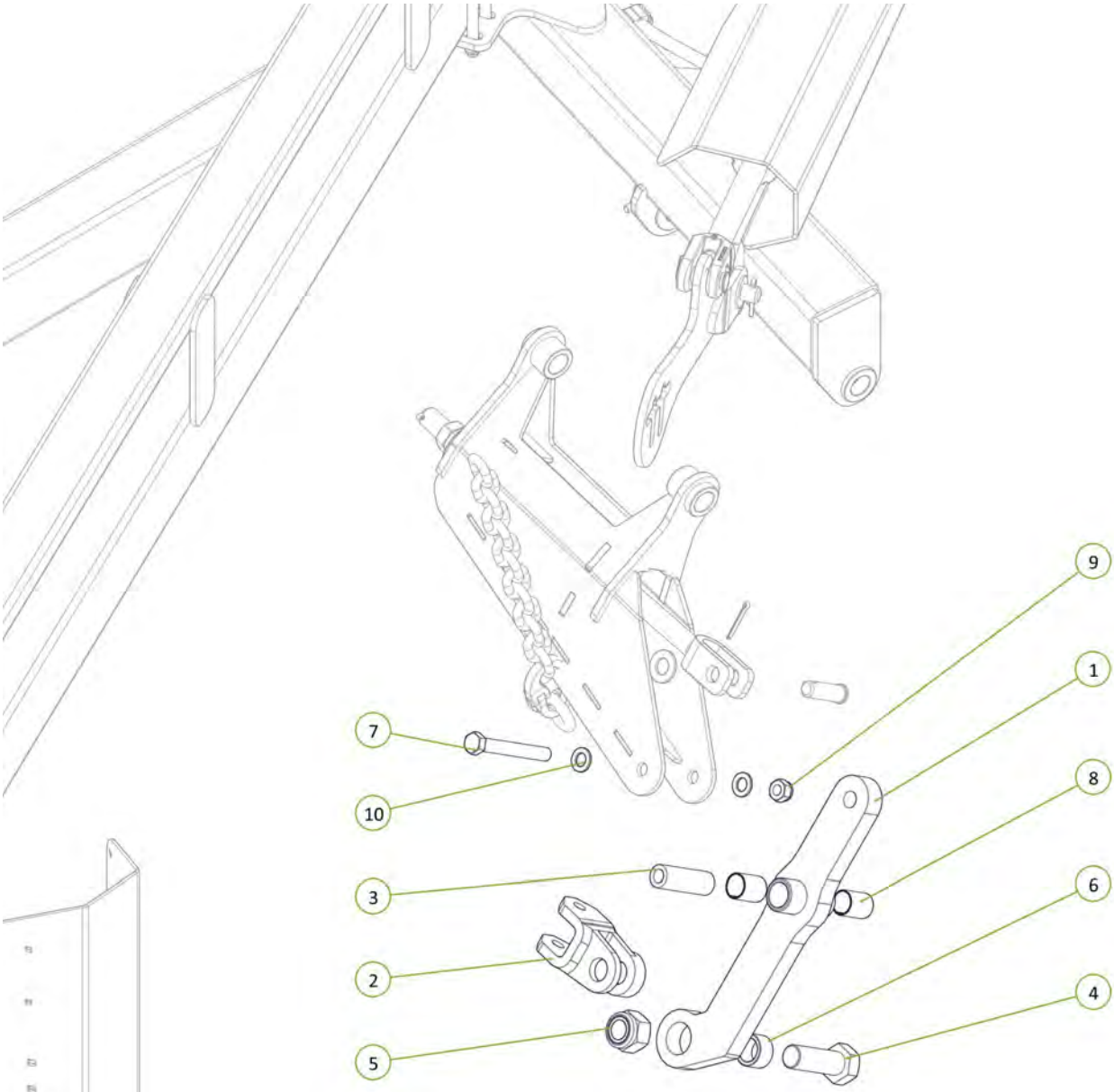

Ensure the clevis can pivot after installation

Item No.	Description	Number	Qty
1	Module Tension Arm No Clevis	0810-104	1
2	Forged Clevis 21mm Bolt Hole	0801-FC21	1
3	Module Pivot Arm Bush	0801-10-110	1
4	M36 x 105 Class 8.8 ZP Bolt	0211-36105	1
5	Nyloc Nut M36	0221-NYL36	1
6	Wear Bush	1501-365033-SS	1
7	M20 x 160 Grade 8.8 ZP Bolt	0211-20160	1
8	35 ID x 50mm DU Bush	0113-MB3550DU	2
9	Nyloc Nut M20	0221-NYL20	1
10	Washer Flat M20	0231-F20	2

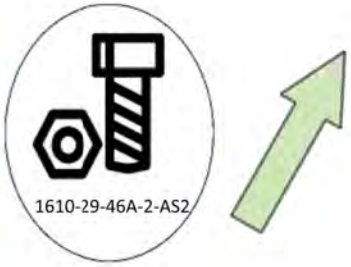

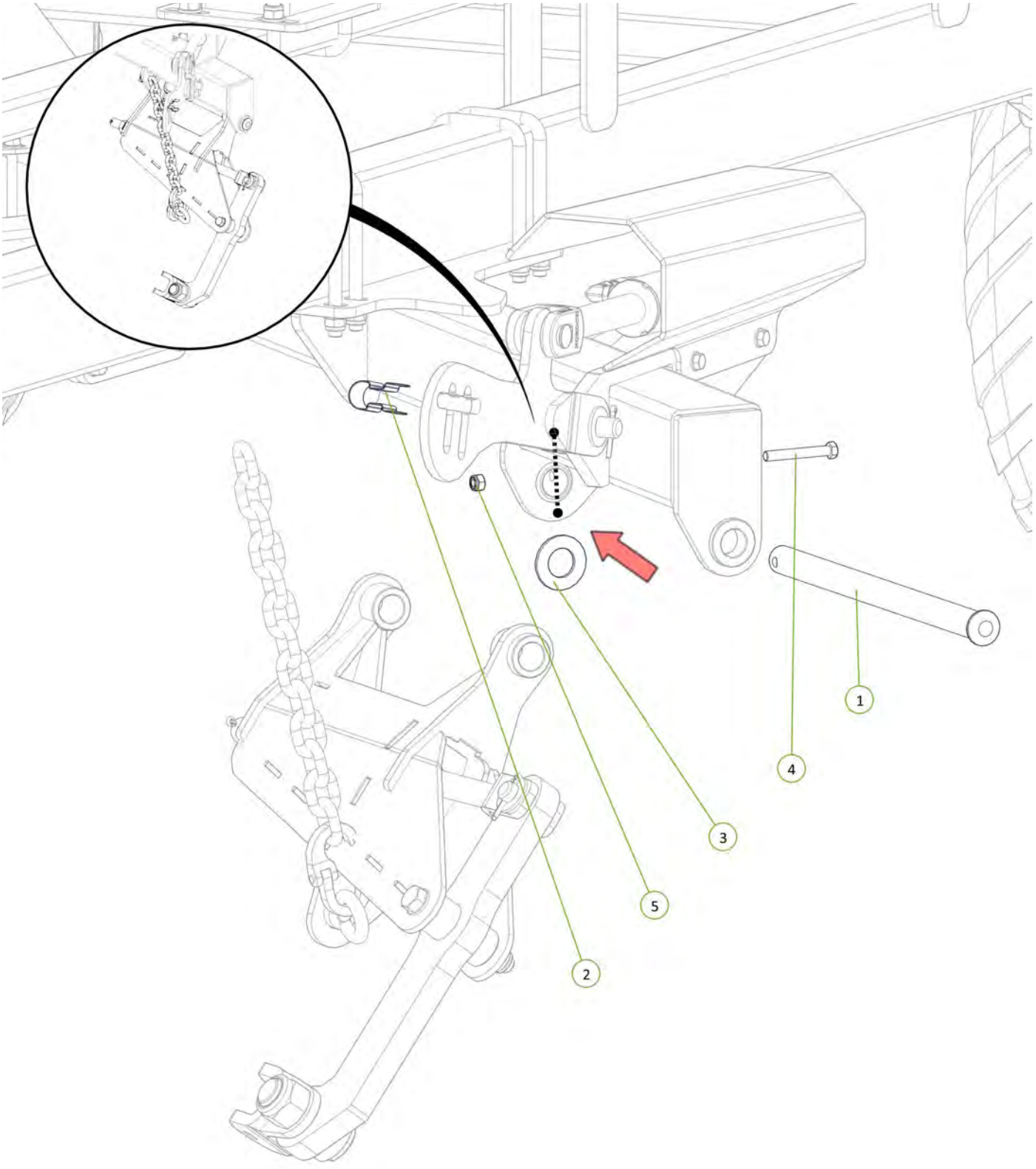

Item No.	Description	Number	Qty
1	Chain Mount Pivot Pin	0801-10-51	1
2	Height Adjustor Retaining Clip	0801-KE014	1
3	Washer High Tensile 1 3/8"	0232-HT13-8	1
4	M12 x 90 Class 10.9 ZP Bolt	0211-1290HT	1
5	Nyloc Nut M12	0221-NYL12	1

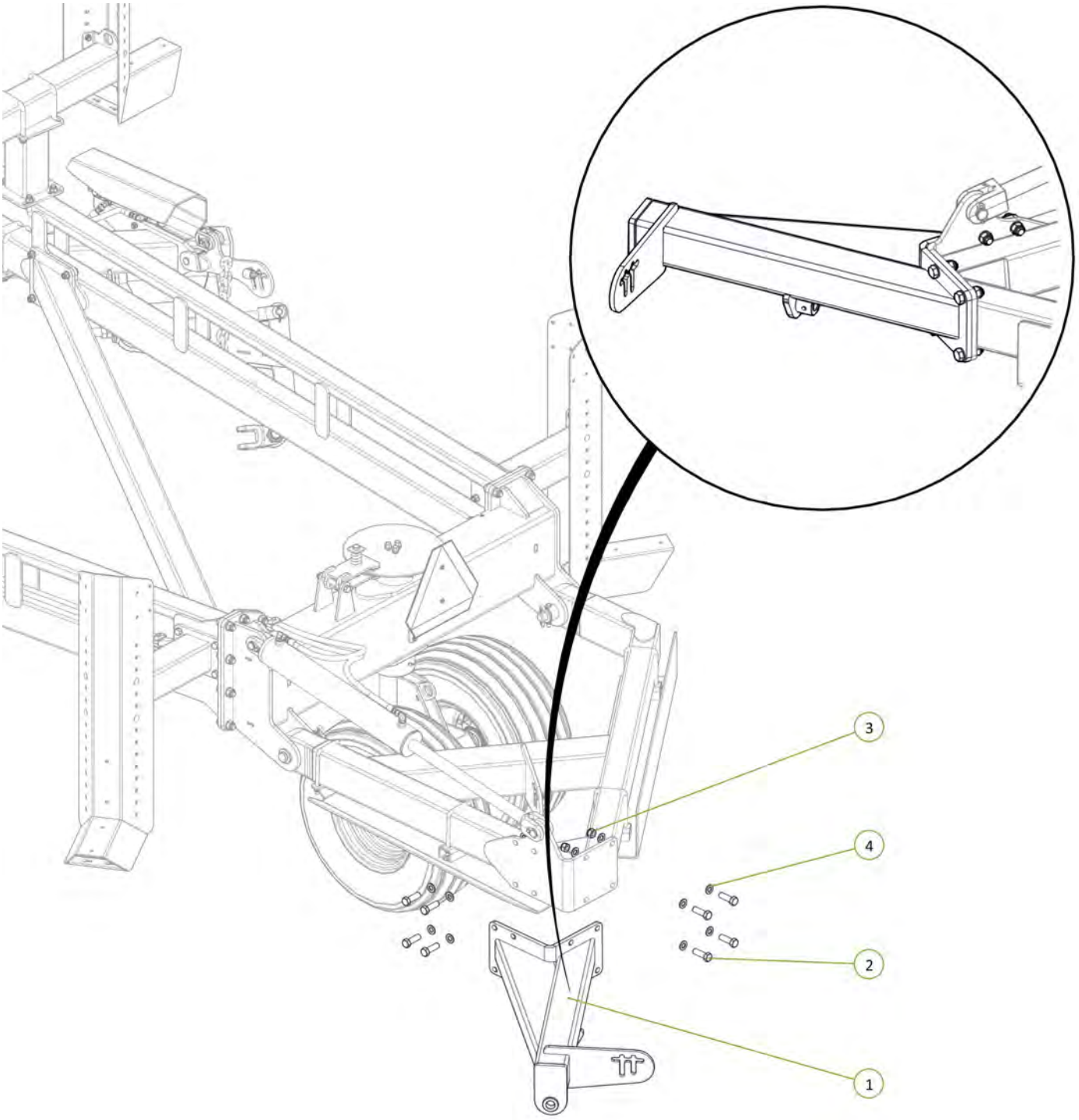

Item No.	Description	Number	Qty
1	Tail Extension	1510-40ST	1
2	M20 x 65 Grade 8.8 ZP Bolt	0211-2065	8
3	Nyloc Nut M20	0221-NYL20	8
4	Washer Flat M20	0231-F20	16

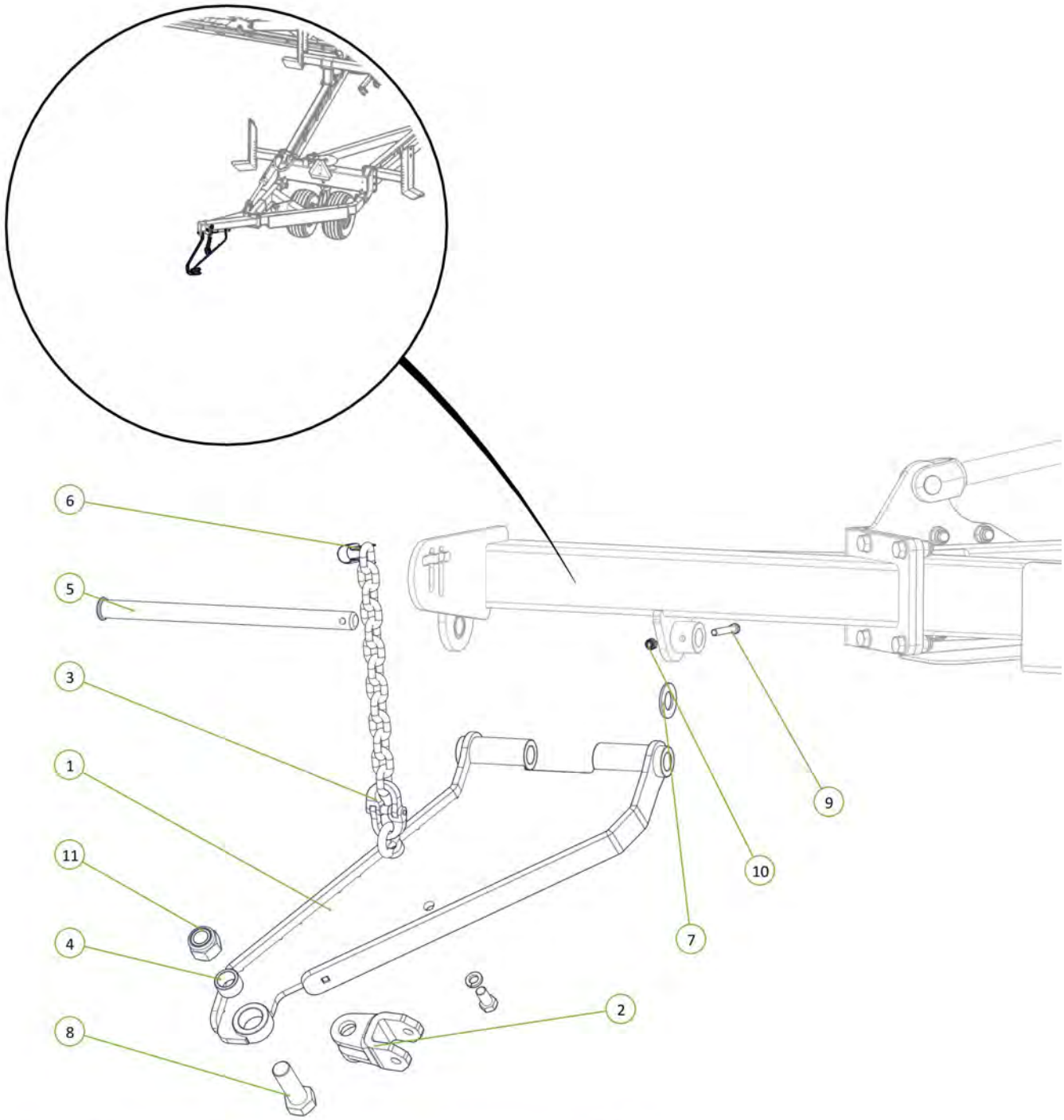

Item No.	Description	Number	Qty
1	Extended Chain Mount Plate	1610-21	1
2	Forged Clevis 21mm Bolt Hole	0801-FC21	1
3	Height Adjusting Chain Assembly 13 Link	0801-20MCA	1
4	Stainless Steel Wear Bush	1501-365033-SS	1
5	Chain Mount Pivot Pin	0801-10-51	1
6	Height Adjustor Retaining Clip	0801-KE014	1
7	Washer High Tensile 1 3/8"	0232-HT13-8	1
8	M36 x 105 grade 8.8 zp Bolt	0211-36105	1
9	M12 x 90 Class 10.9 ZP Bolt	0211-1290HT	1
10	Nyloc Nut M12	0221-NYL12	1
11	Nyloc Nut M36	0221-NYL36	1

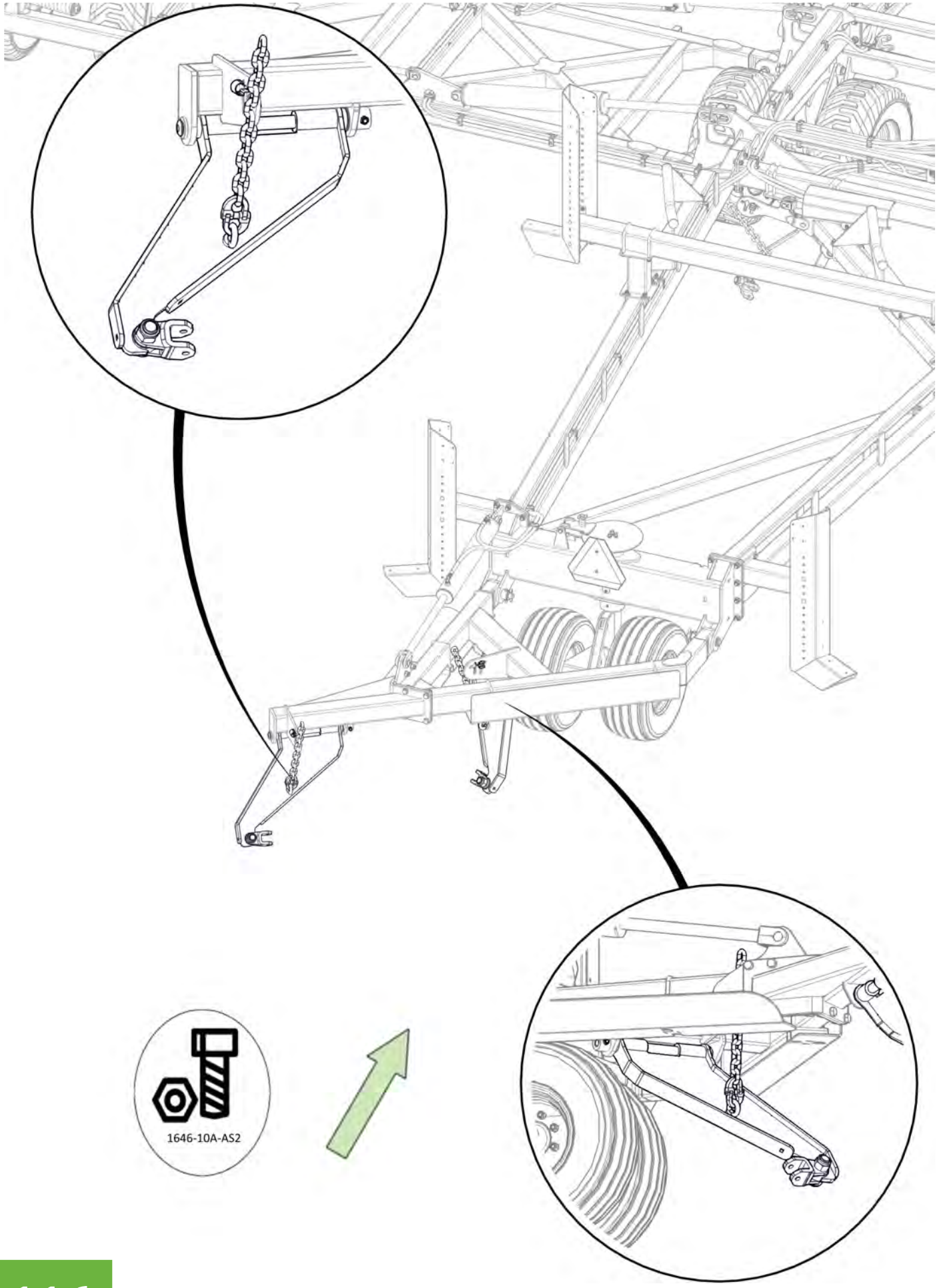
1646-10A-AS2

Item No.	Description	Number	Qty
1	Drawbar	1610-08	1
2	PCH Wing Pivot Pin	0801-10-08-235	2
3	35 ID x 30mm DU Bush	0113-MB3530DU	4
4	M12 x 90 Class 10.9 ZP Bolt	0211-1290HT	2
5	Nyloc Nut M12	0221-NYL12	2
6	Cotter Pin M13 x 63	0261-PINC1363	2

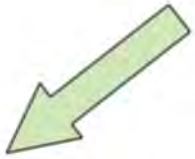

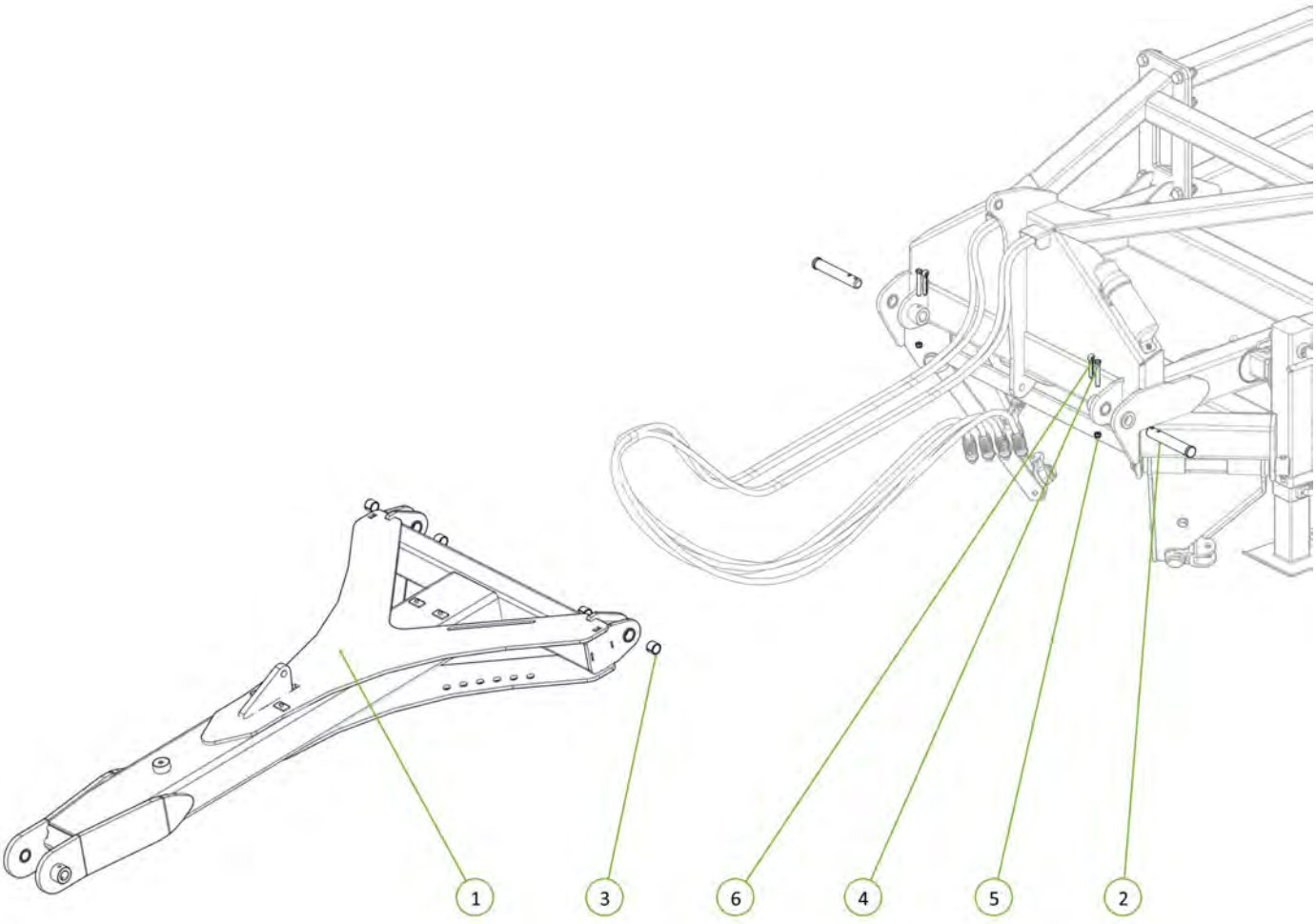

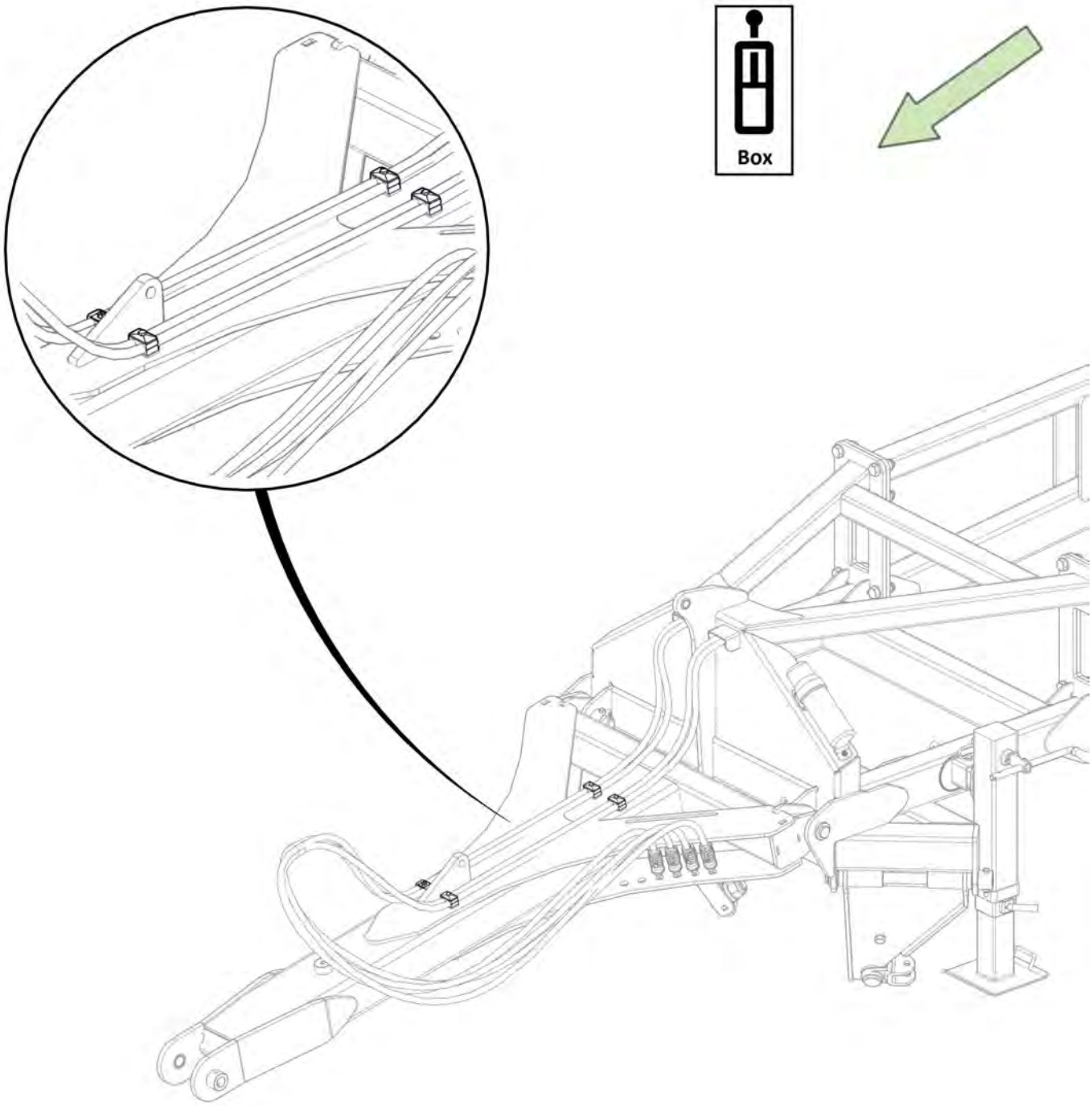
Box

Item No.	Description	Number	Qty
1	Hose Post Spring	1601-CDB-00-0012	1
2	M16 x 35 grade 8.8 zp Bolt	0211-1635	1
3	Washer Spring M16	0231-S16	1
4	Washer Flat M16	0231-F16	1

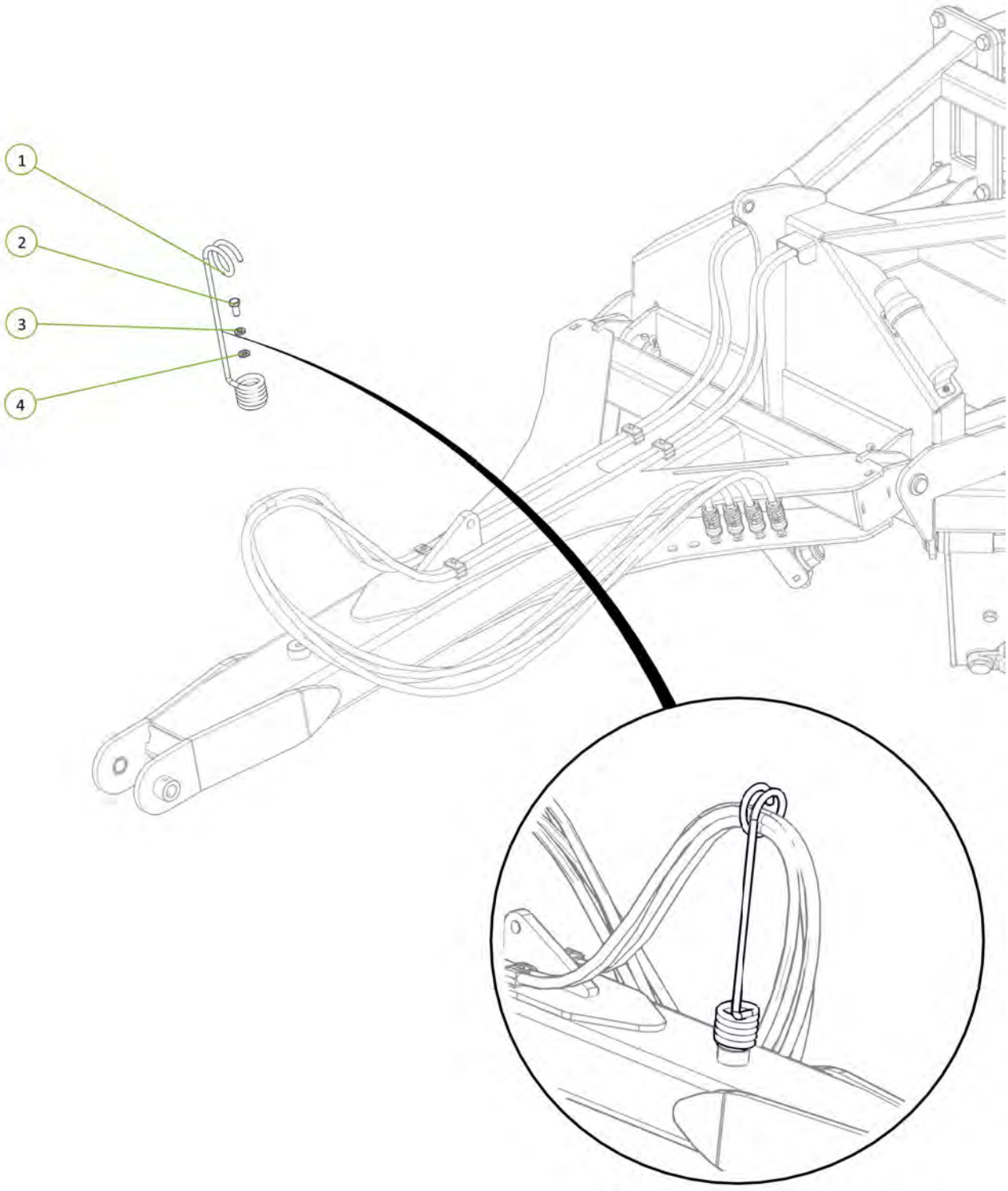

Item No.	Description	Number	Qty
1	4" Bore 12" Stroke 2" Rod Extended Hydraulic Cylinder	0311-412EXT-2	1

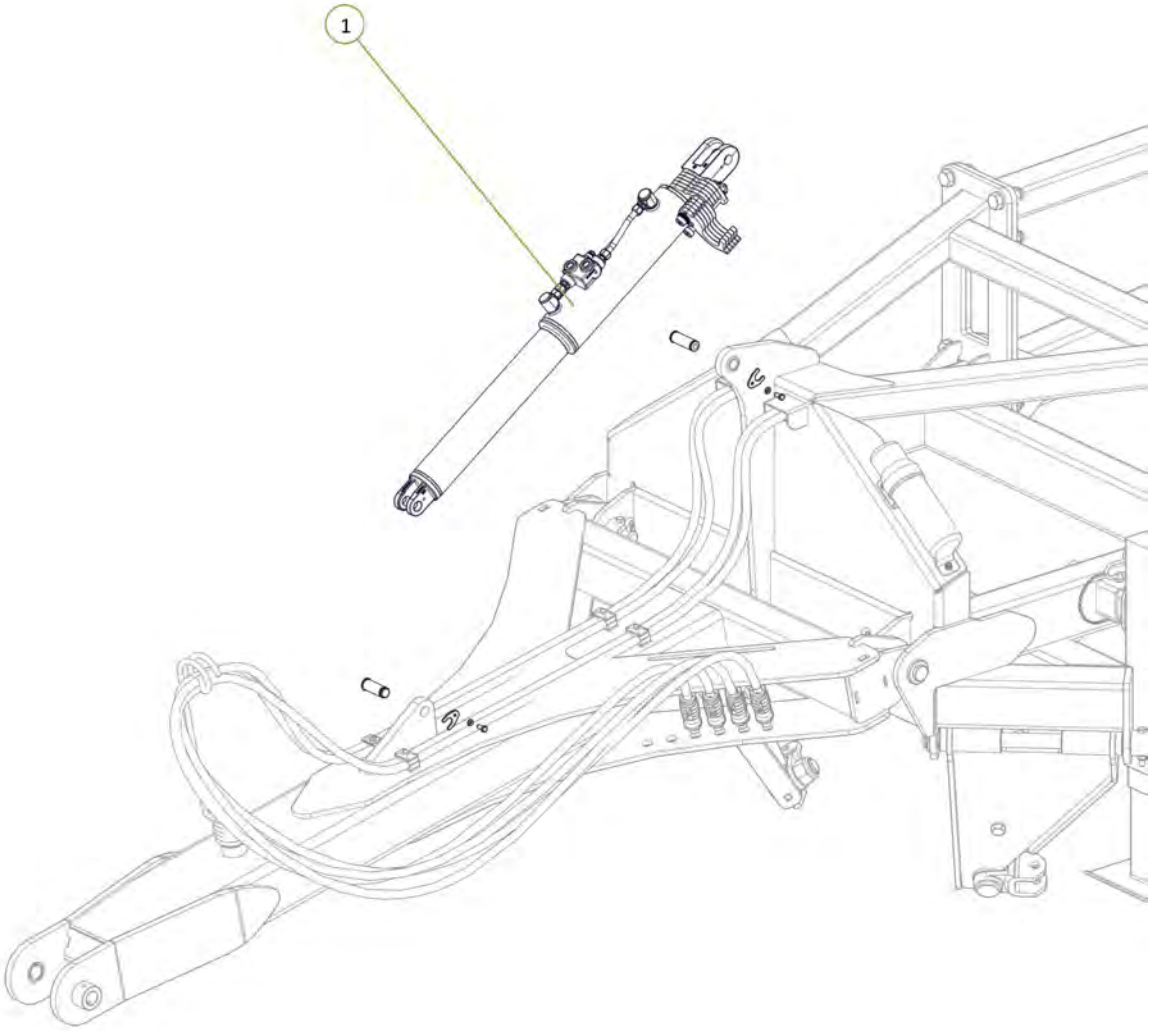

Item No.	Description	Number	Qty
1	3/4" JIC Male 3/4" UN O Ring Male 90° Elbow	0323-S91-1212	2

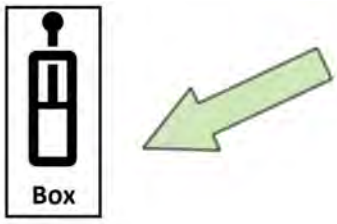

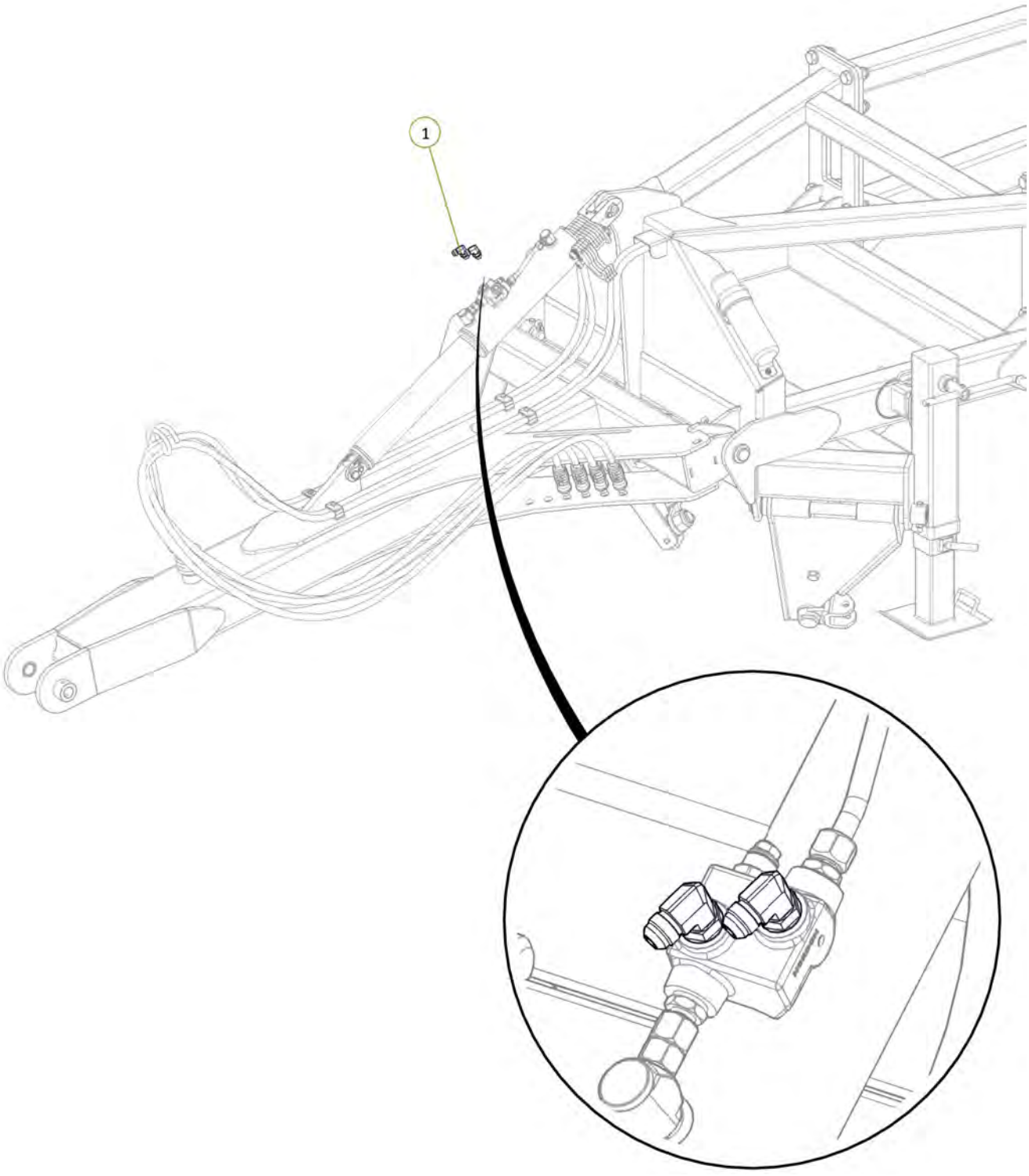

Item No.	Description	Number	Qty
1	Tractor to Front Lift Cylinder Extend Port Fitted With Blue EXT Grip	H46-2-05-BE-EXT	1
2	Tractor to Front Lift Cylinder Extend Port Fitted With Blue RTC Grip	H46-2-06-BR-RCT	1

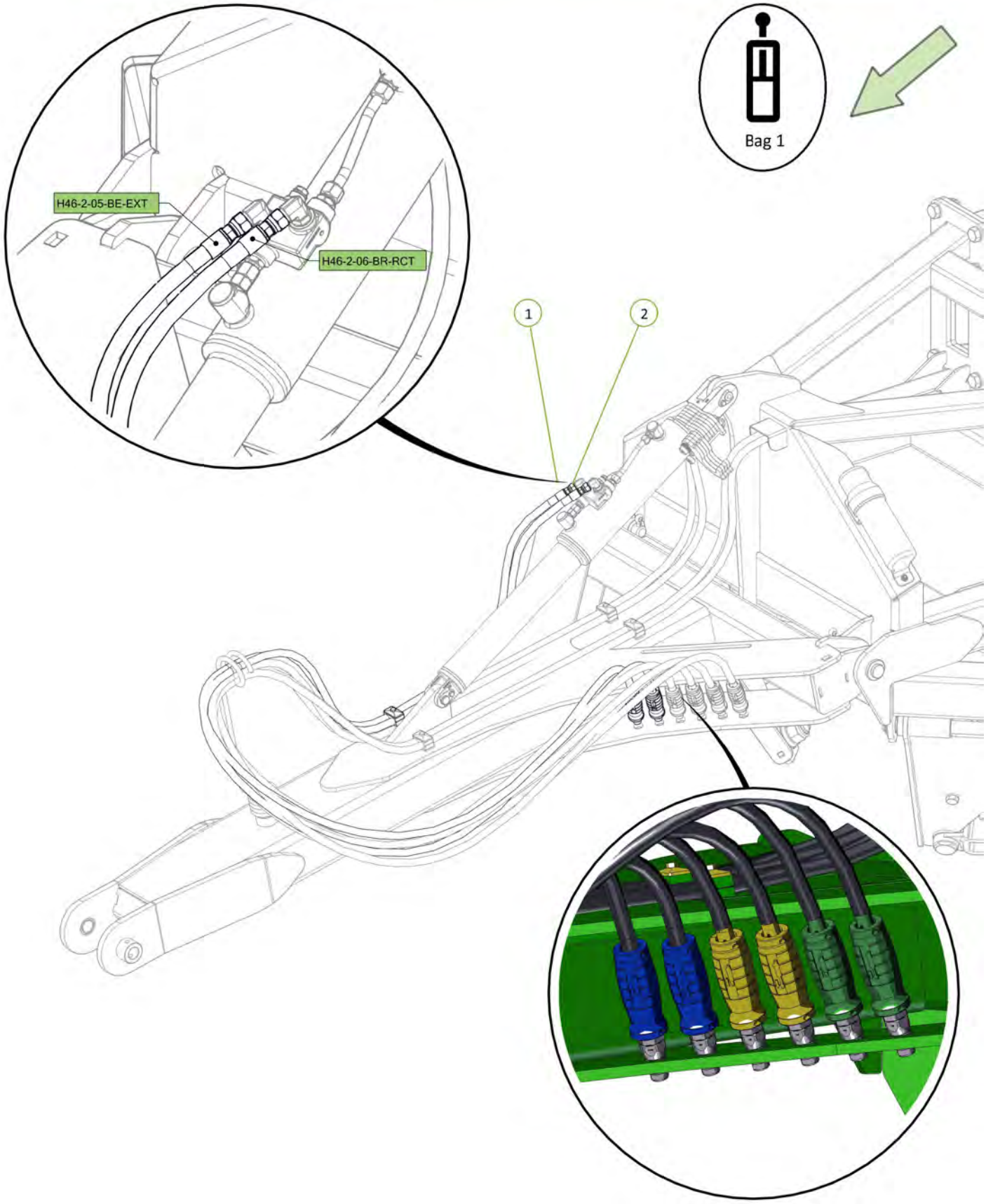

Item No.	Description	Number	Qty
1	Tow Hitch For Bull Pull Swivel Hitch	0810-09-BP	1
2	Bull Pull Swivel Hitch Cat 4 with 1-1/2" Insert	0801-BPF-CAT-4JDF-2	1
3	1" x 5-1/2" UNF Grade 8 ZP Bolt	0213-1 51-2	3
4	Nyloc Nut 1" UNF	0223-NYL1	3
5	35 ID x 50mm DX Bush	0113-MB3550DX	2
6	Grease Nipple 1/4" UNF 45°	0181-GN1-445	2

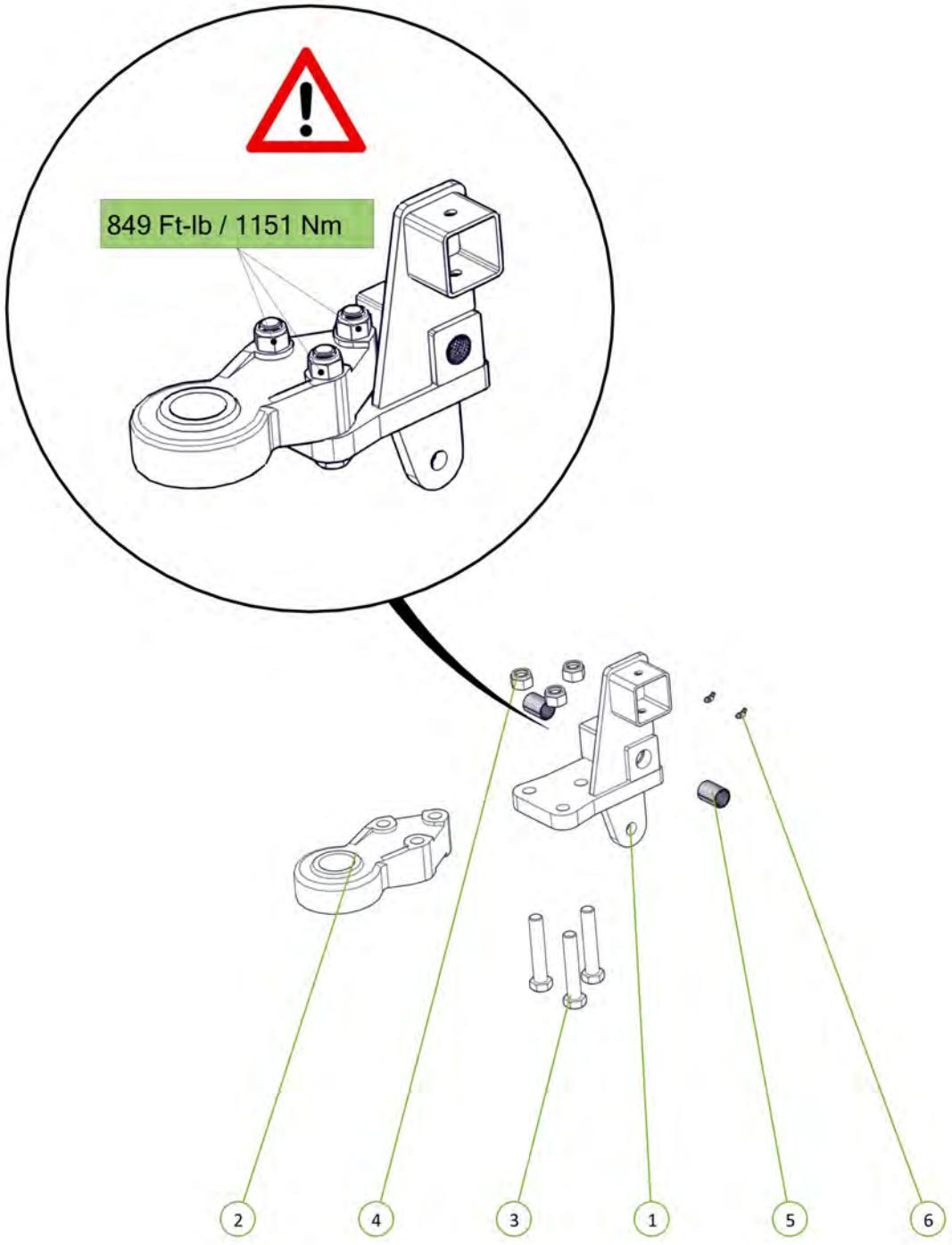

Item No.	Description	Number	Qty
1	Tow Hitch Pivot Pin	0801-10-14	1
2	M12 x 90 Class 10.9 ZP Bolt	0211-1290HT	2
3	Nyloc Nut M12	0221-NYL12	2

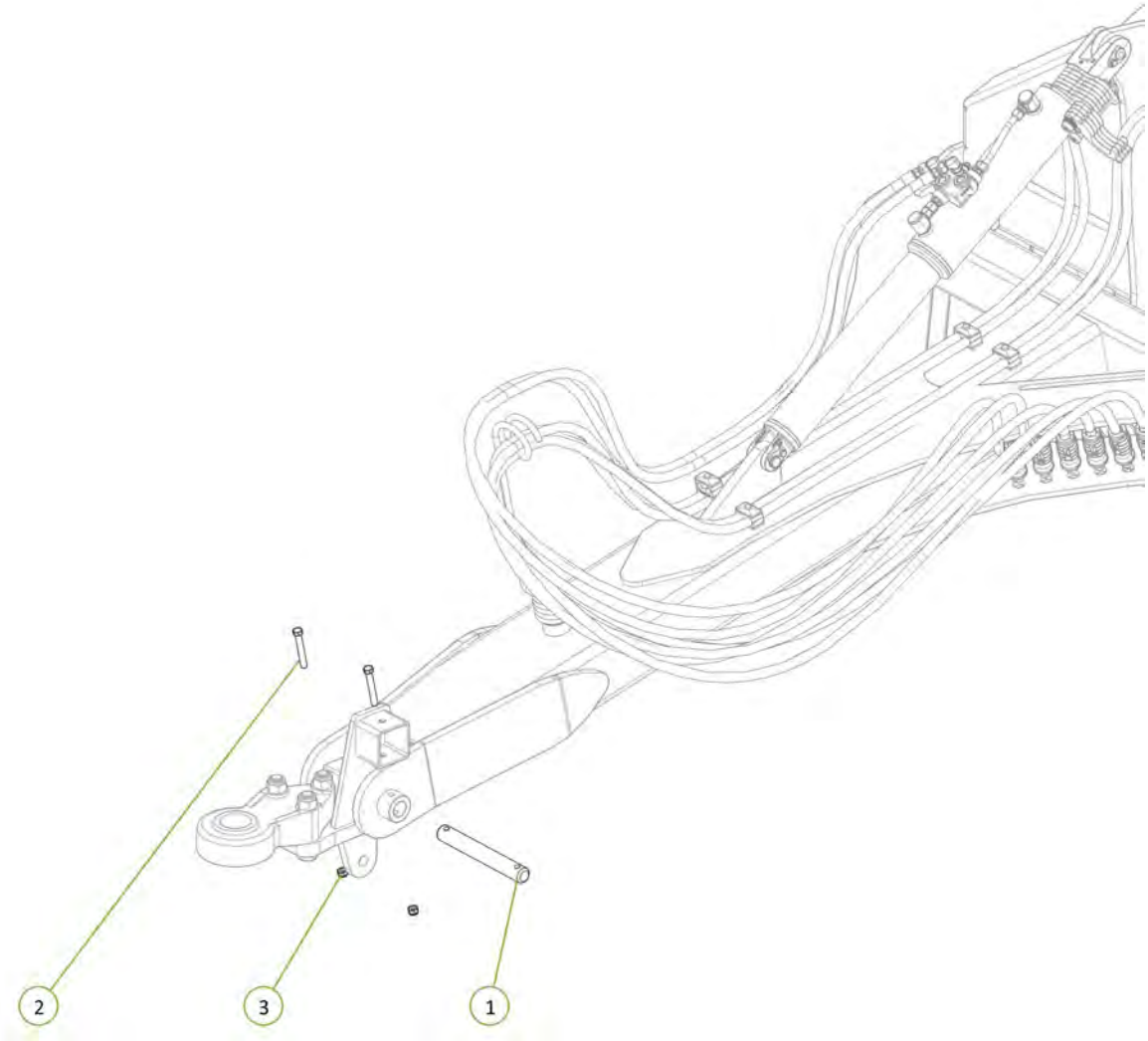

Item No.	Description	Number	Qty
1	46' Parallel Arm	0810-64	1
2	Clevis Pin 25mm x 75mm	0801-KE0307-1	2
3	Washer Flat 1"	0232-F1	2
4	Cotter Pin M5 x 50	0261-PINC550	2

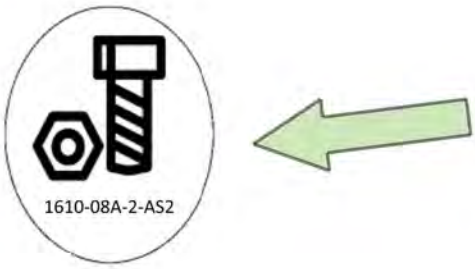

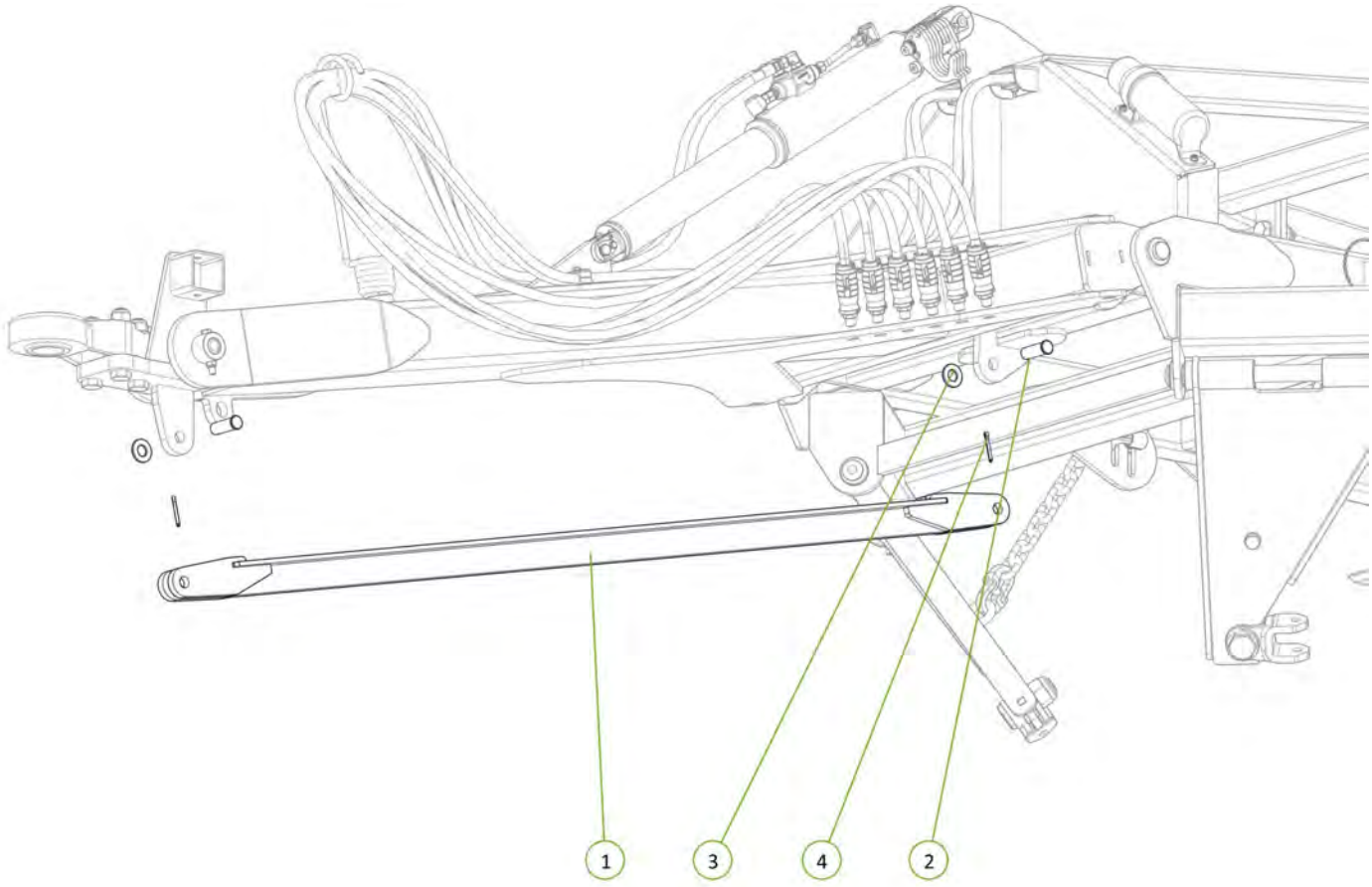

Item No.	Description	Number	Qty
1	Safety Chain Assembly	0810-16	1

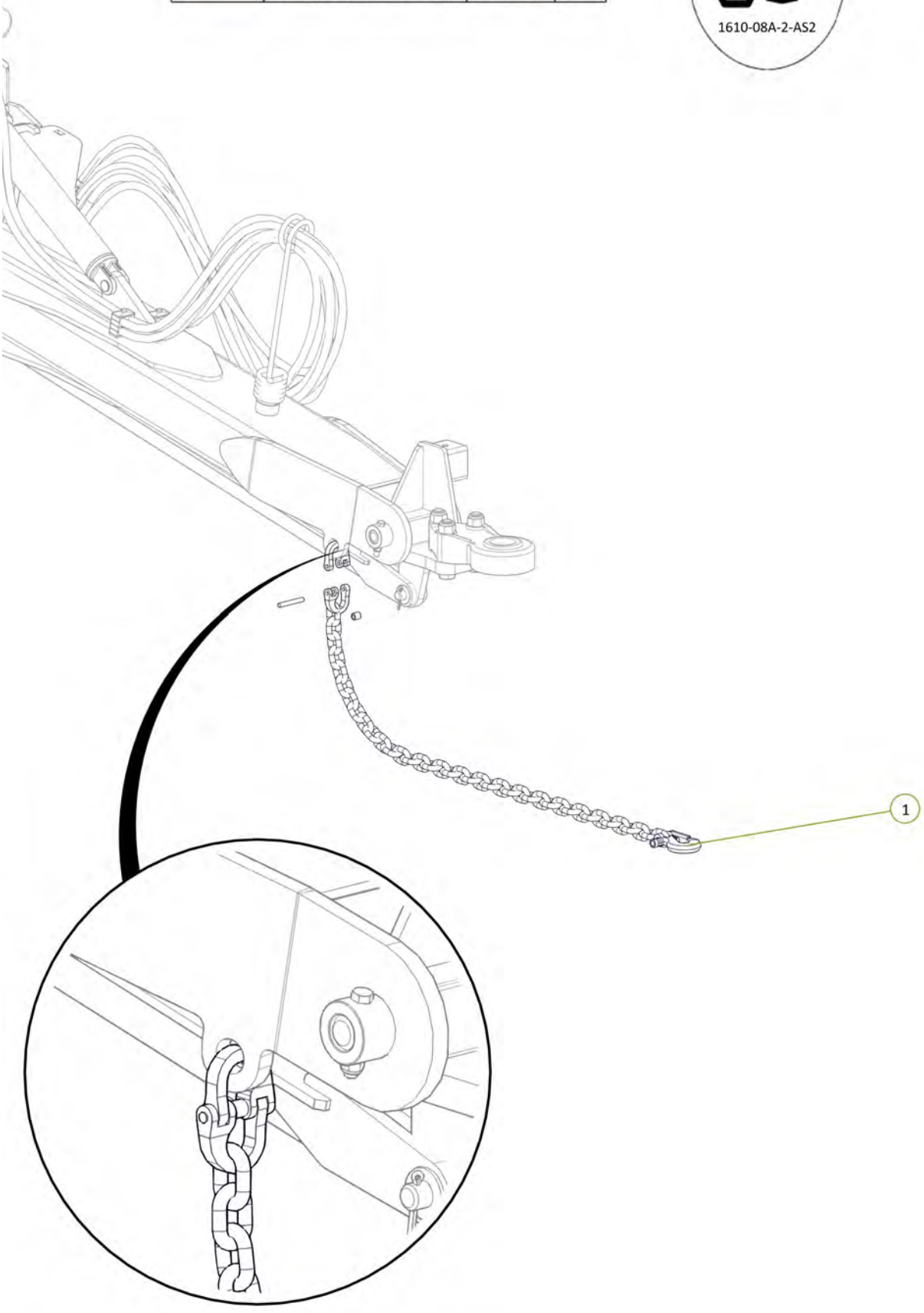

Item No.	Description	Number	Qty
1	Cylinder Safety Stop	0800-688	1
2	Square Loop Pin 5/16" x 3 1/2"	0511-PINLOOPSQ516x312	1

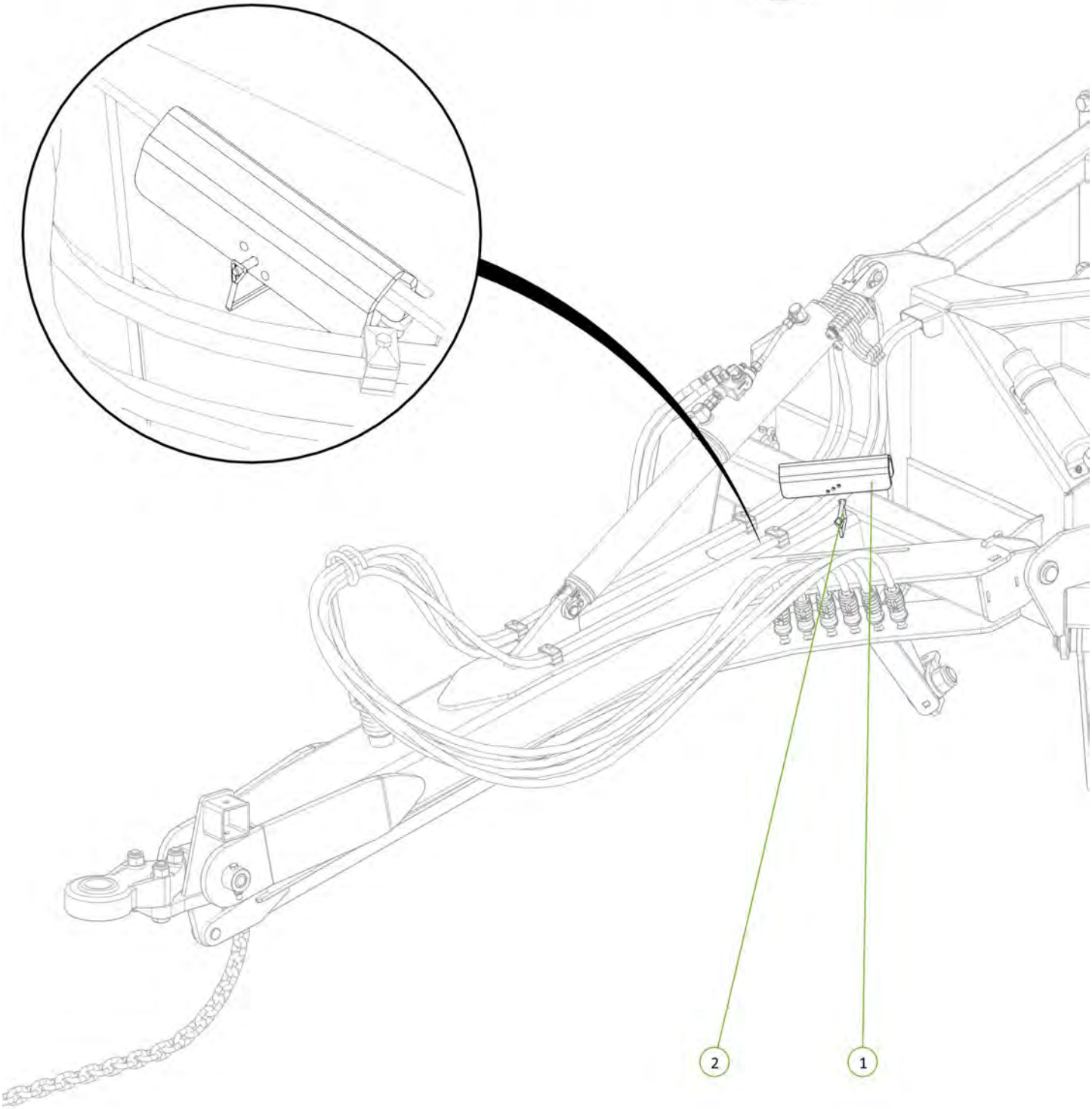

Item No.	Description	Number	Qty
1	Ratcheting Gear Wrench 1 3/4"	0802-GW1 3-4	1
2	20mm Bolt Swivel Unit	0802-PCHB55	1
3	M20 x 110 grade 10.9 ZP Short Thread Bolt	0211-20110 ST	1
4	Nyloc Nut M20	0221-NYL20	1

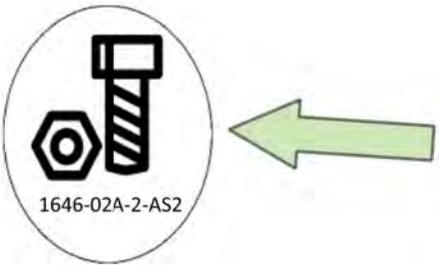

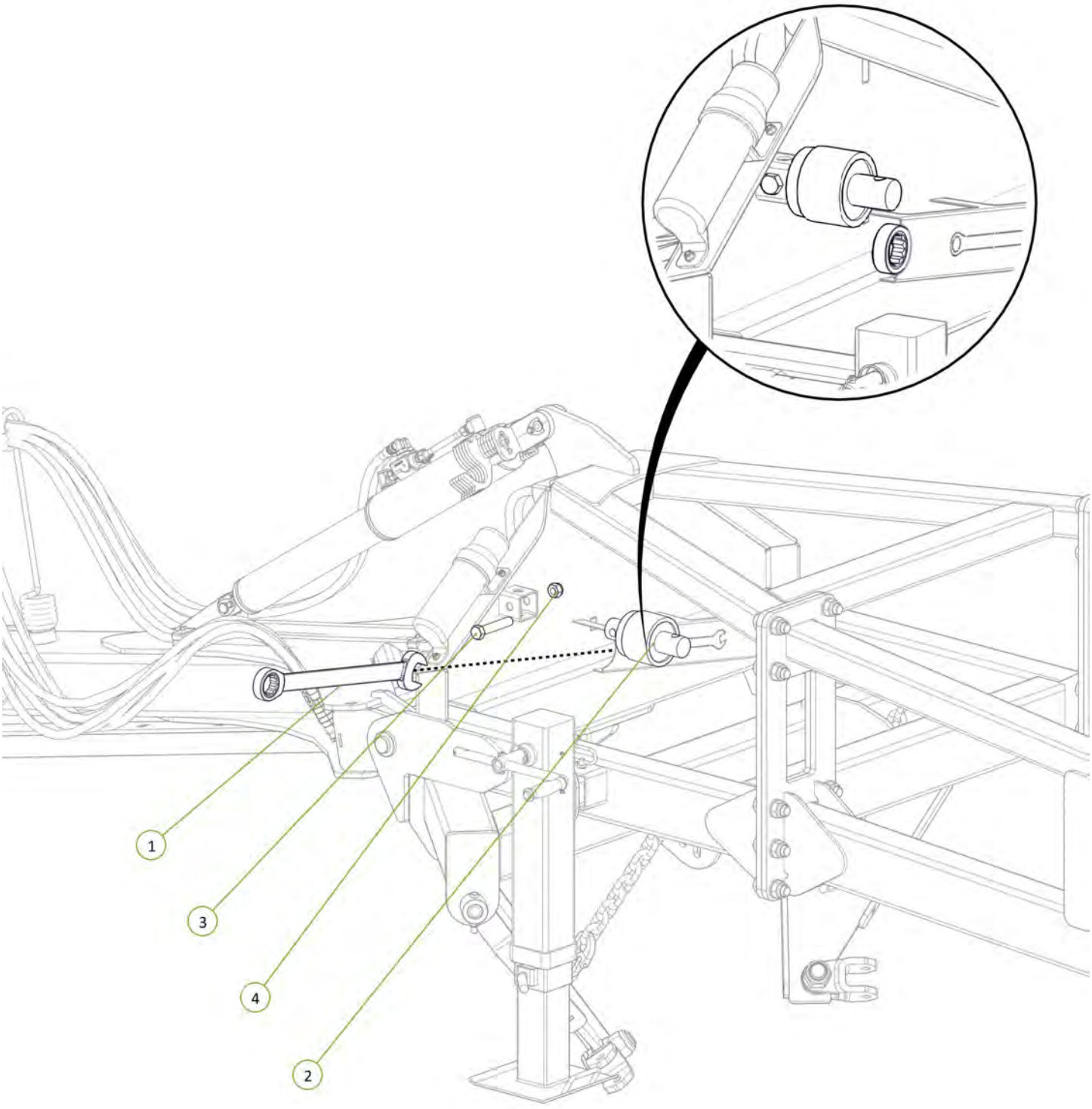

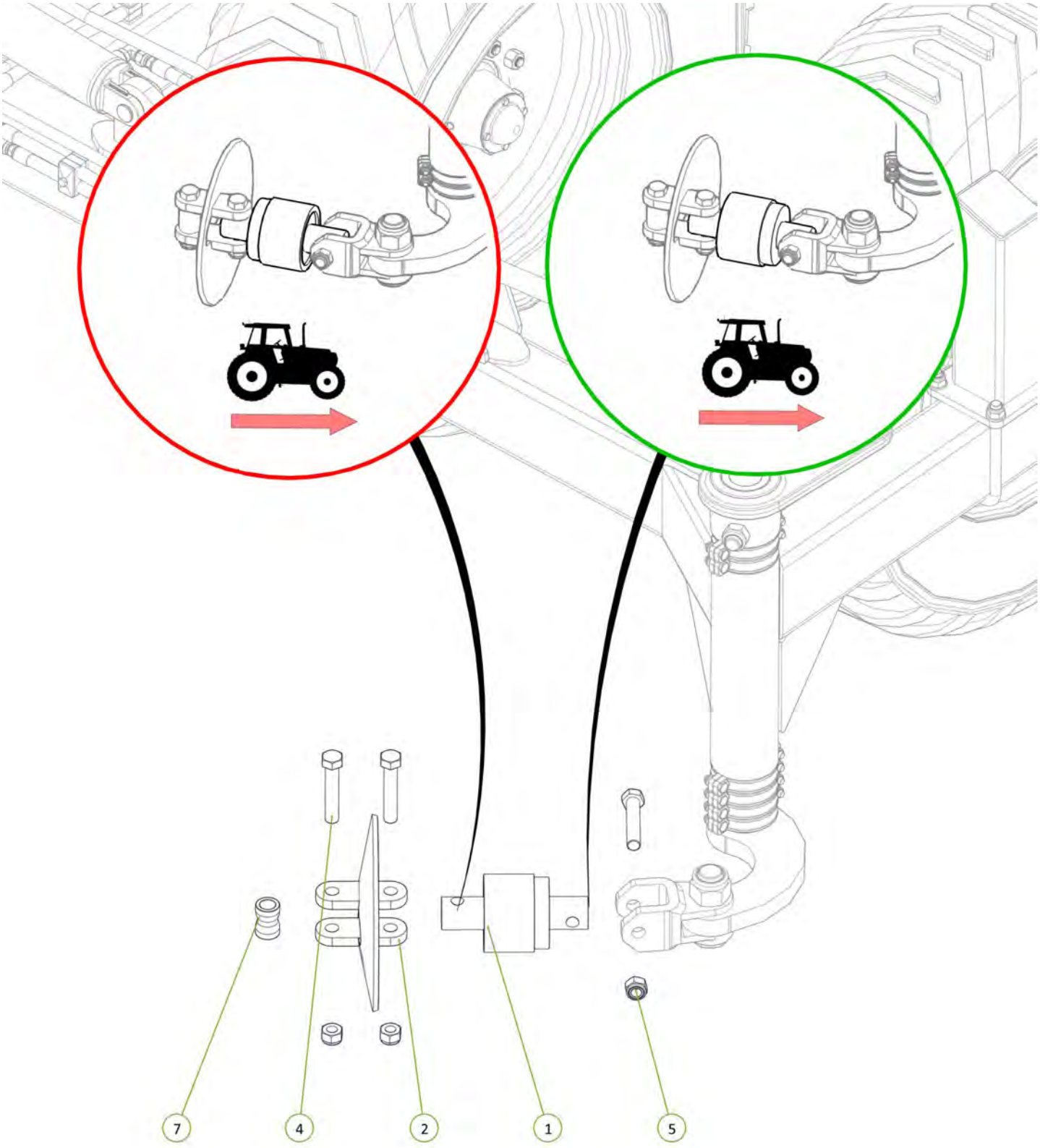

Item No.	Description	Number	Qty
1	20mm Bolt Swivel Unit	0802-PCHB55	1
2	Disc Chain Tie Plate Link 20mm	0802-DCTP-20	1
4	M20 x 110 grade 10.9 ZP Short Thread Bolt	0211-20110 ST	3
5	Nyloc Nut M20	0221-NYL20	3
7	Disc Chain Spacer	0801-253755	1

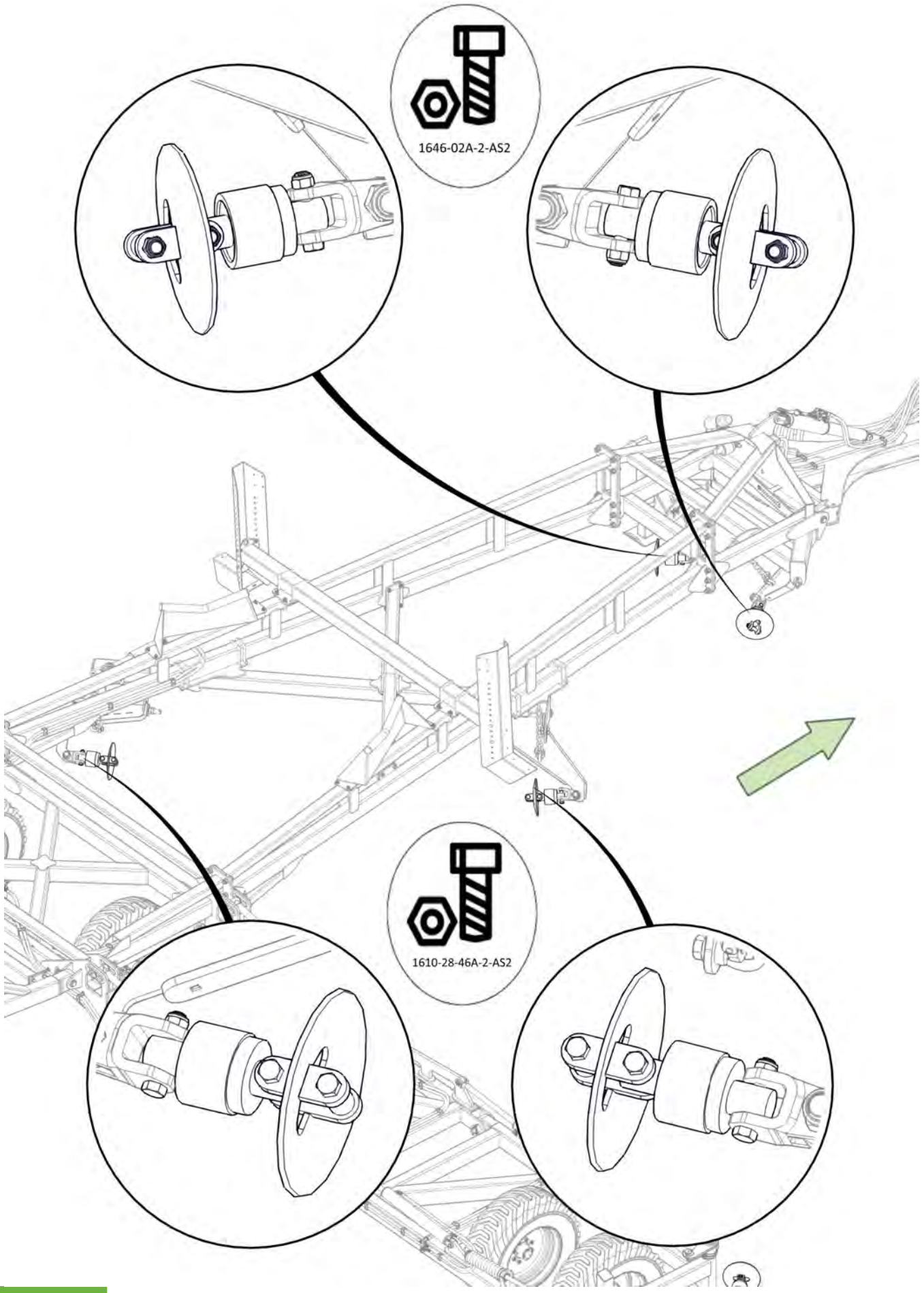
1646-02A-2-AS2
1610-28-46A-2-AS2

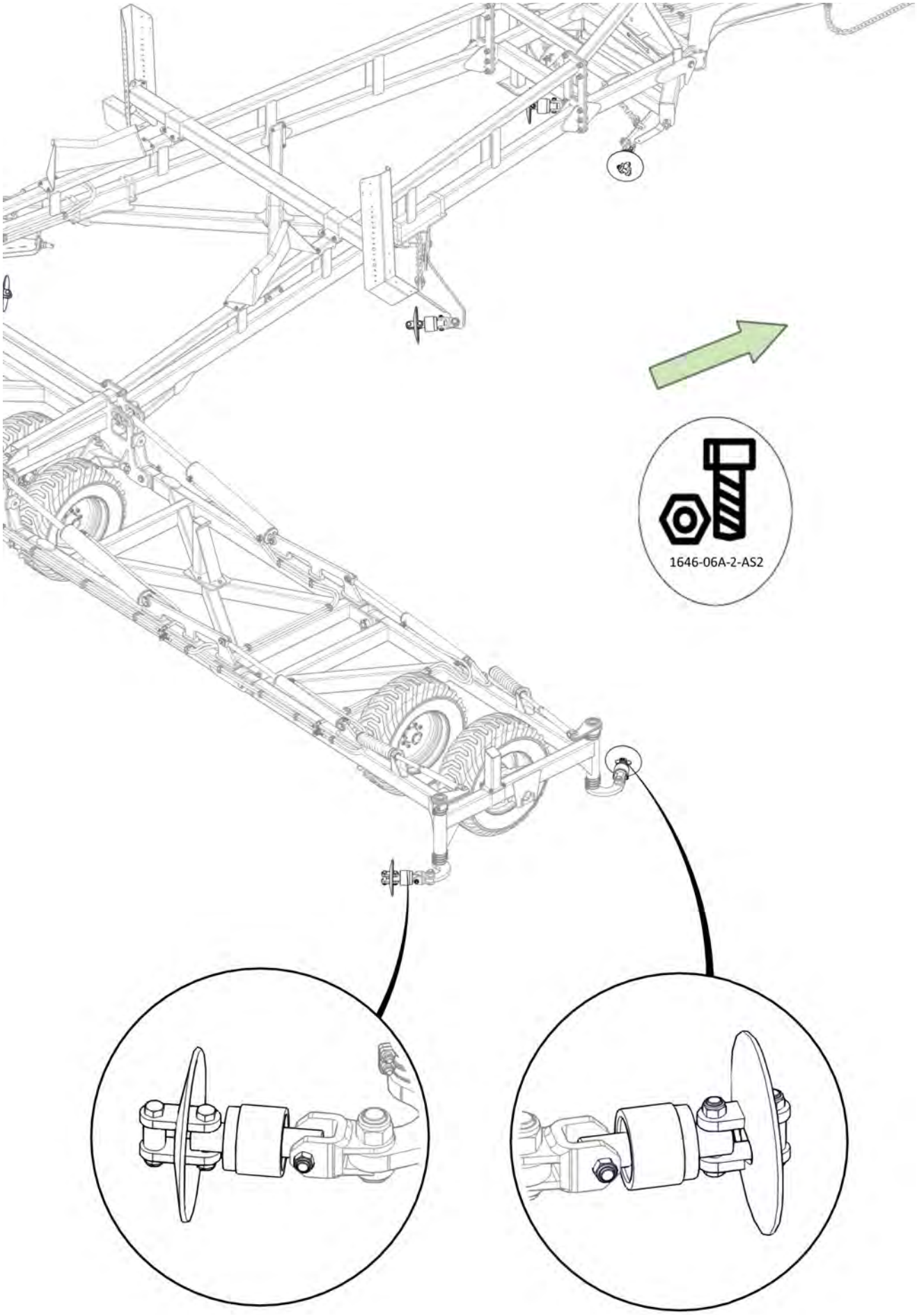
1646-06A-2-AS2

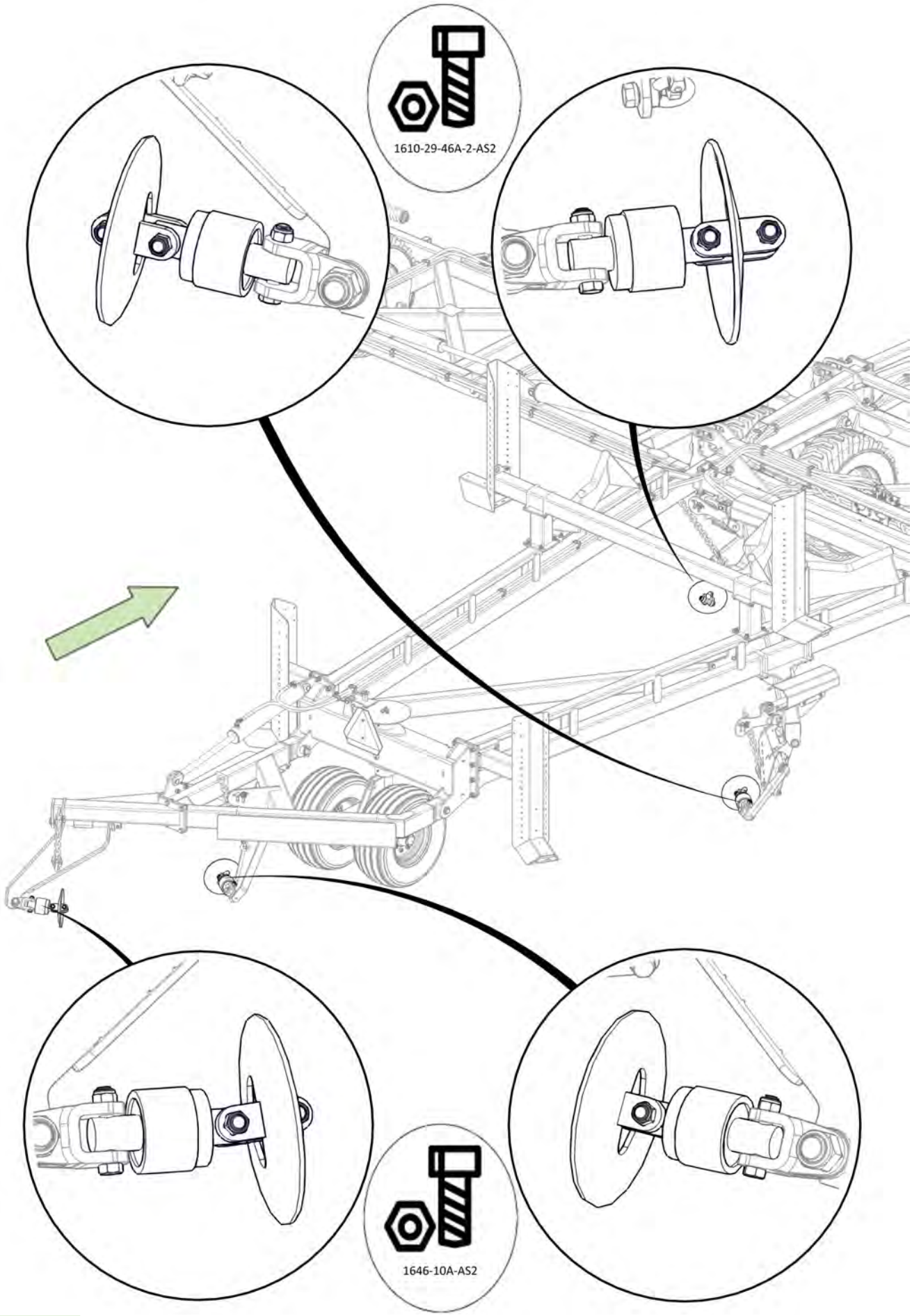
1610-29-46A-2-AS2
1646-10A-AS2

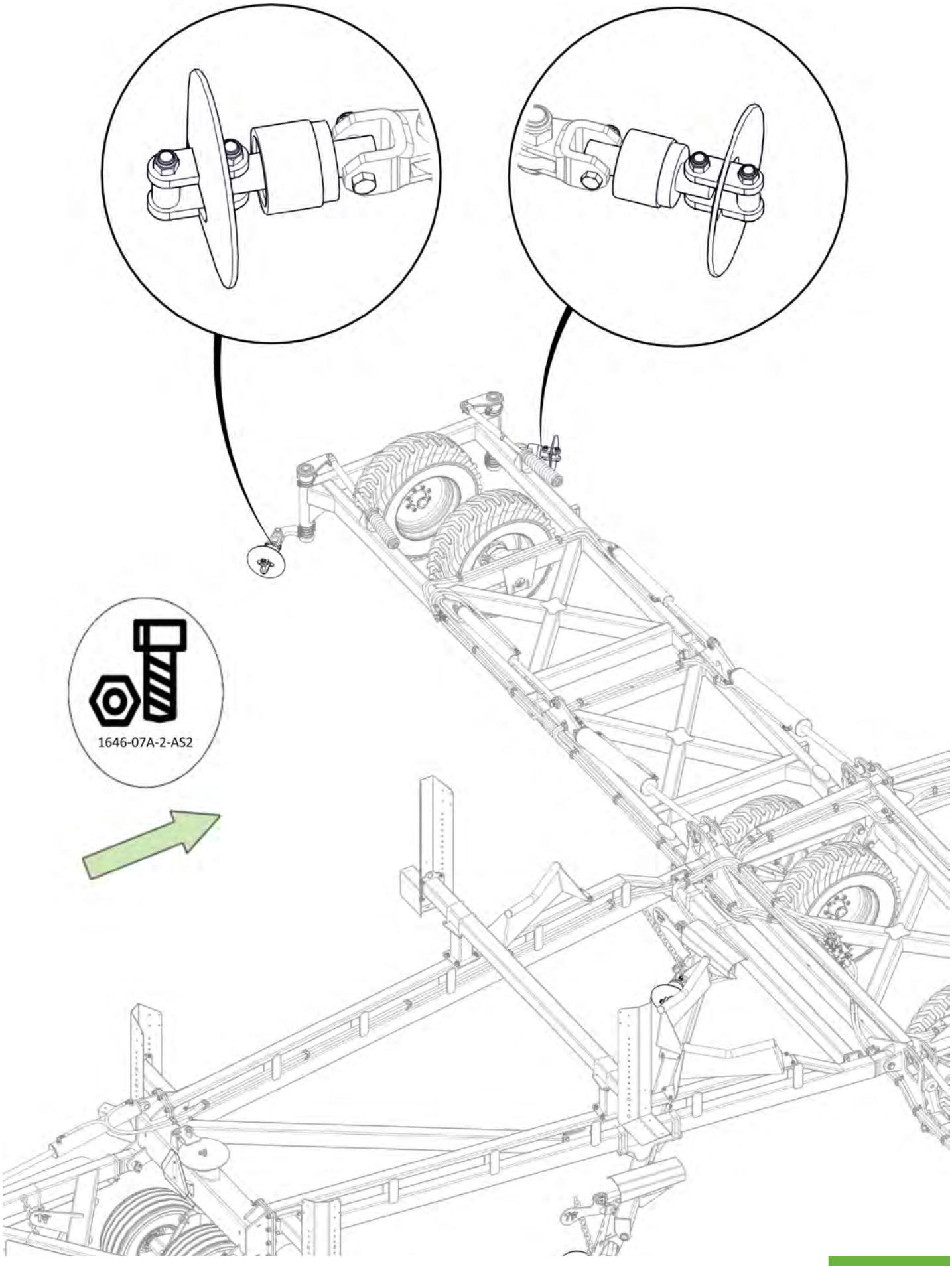
1646-07A-2-AS2

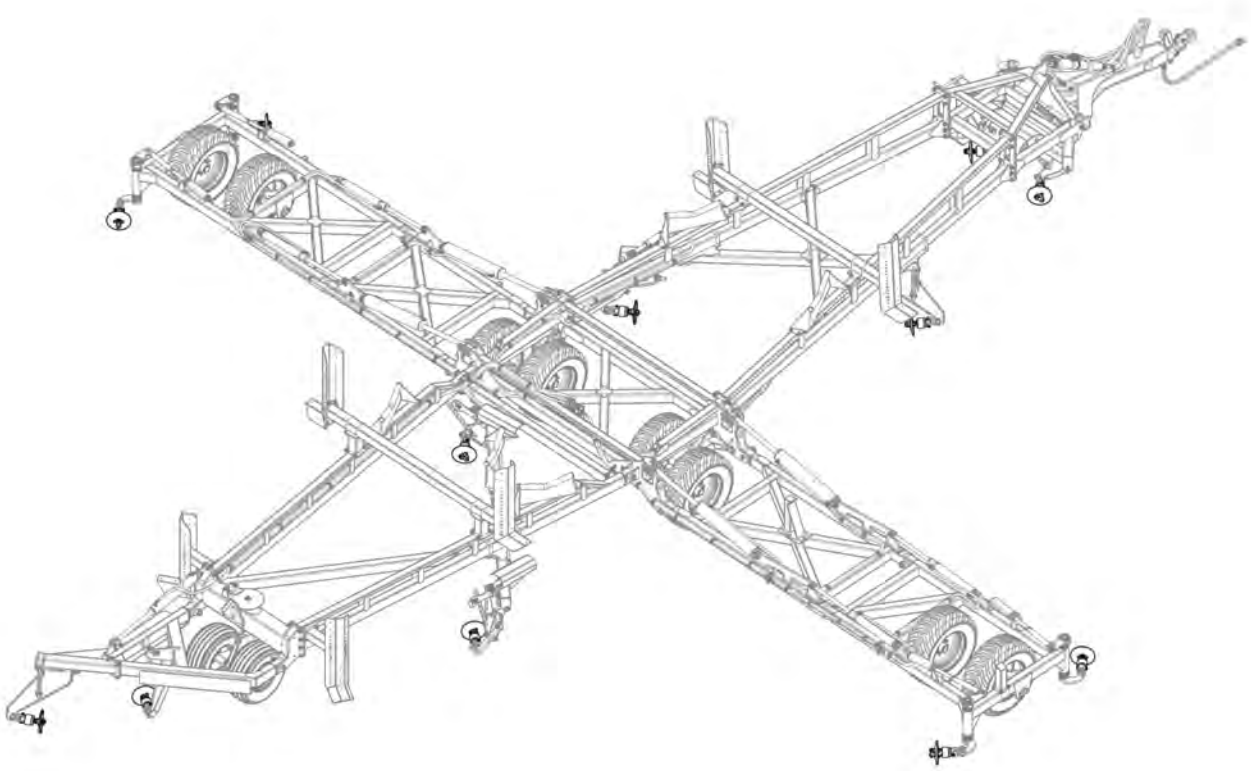

All bearings correctly orientated with seal facing rear of machine ○

Signed_____ Date__/__/__
Unit Serial Number_____

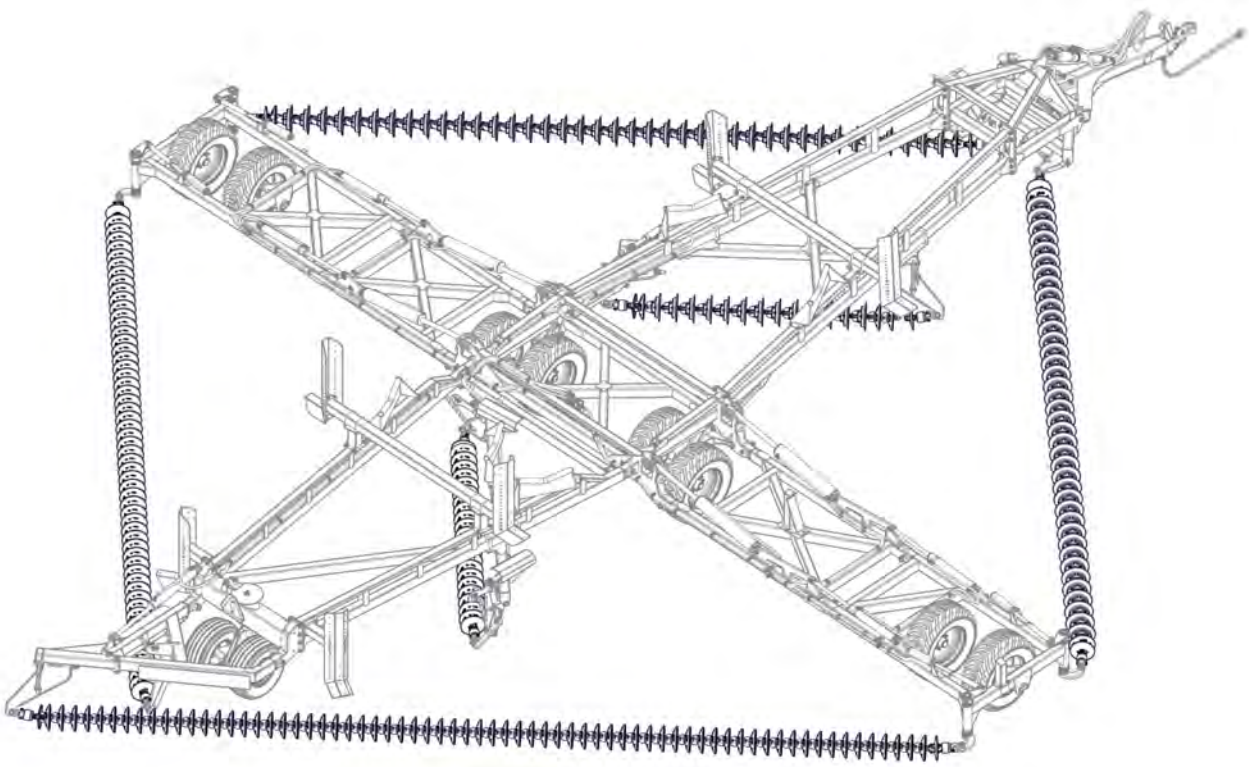

Section 3
Decal Application

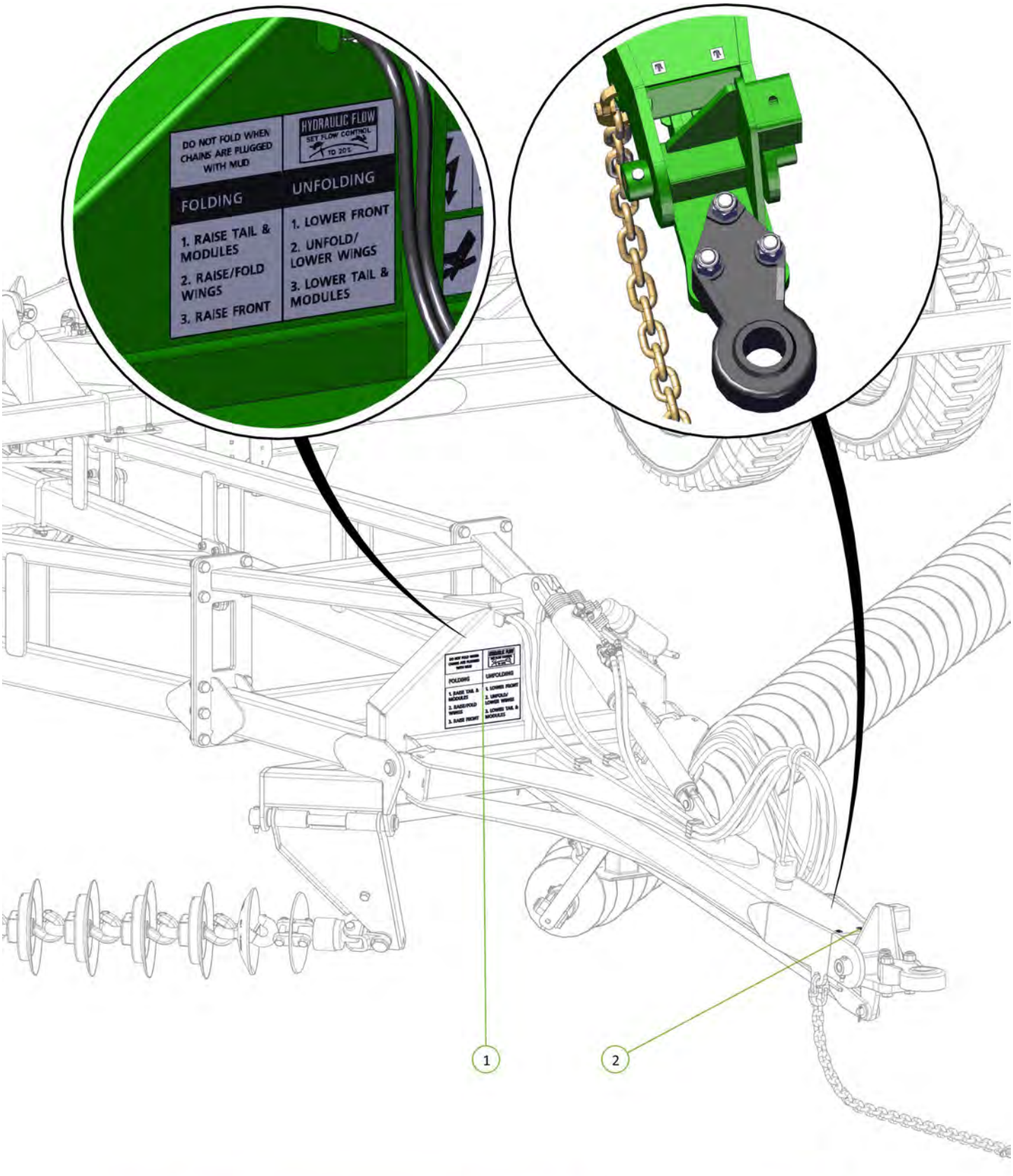

Item No.	Description	Number	Qty
1	Fold-Unfold Decal 340 x 280mm	0801-S18	1
2	Grease Decal	0801-S10	2

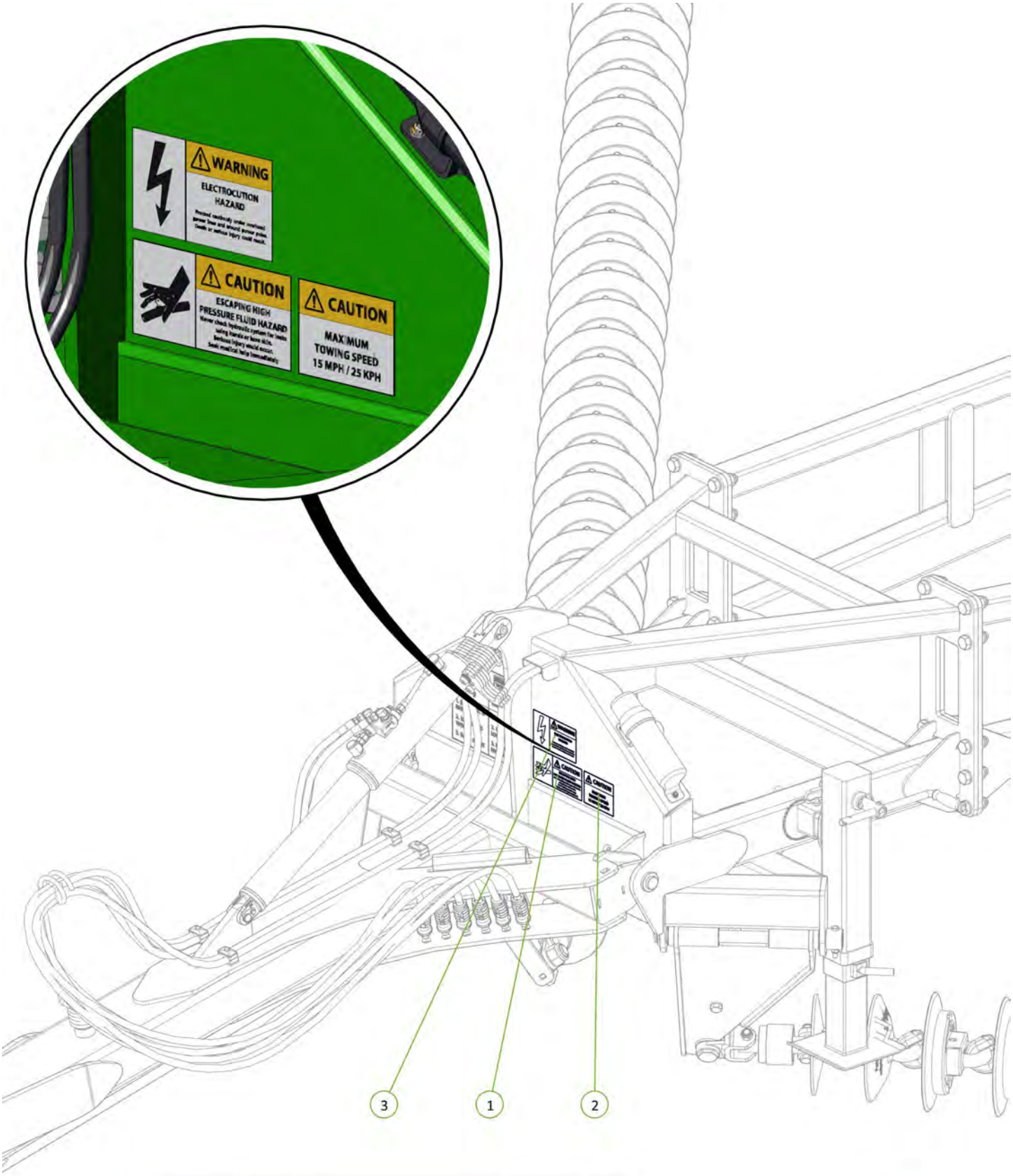

Item No.	Description	Number	Qty
1	Hydraulic Pressure Caution Decal	0801-S4	1
2	Towing Speed Decal	0801-S5	1
3	Electrocution Hazard Decal	0801-S6	1

Item No.	Description	Number	Qty
1	Data Plate	0801-SDP	1

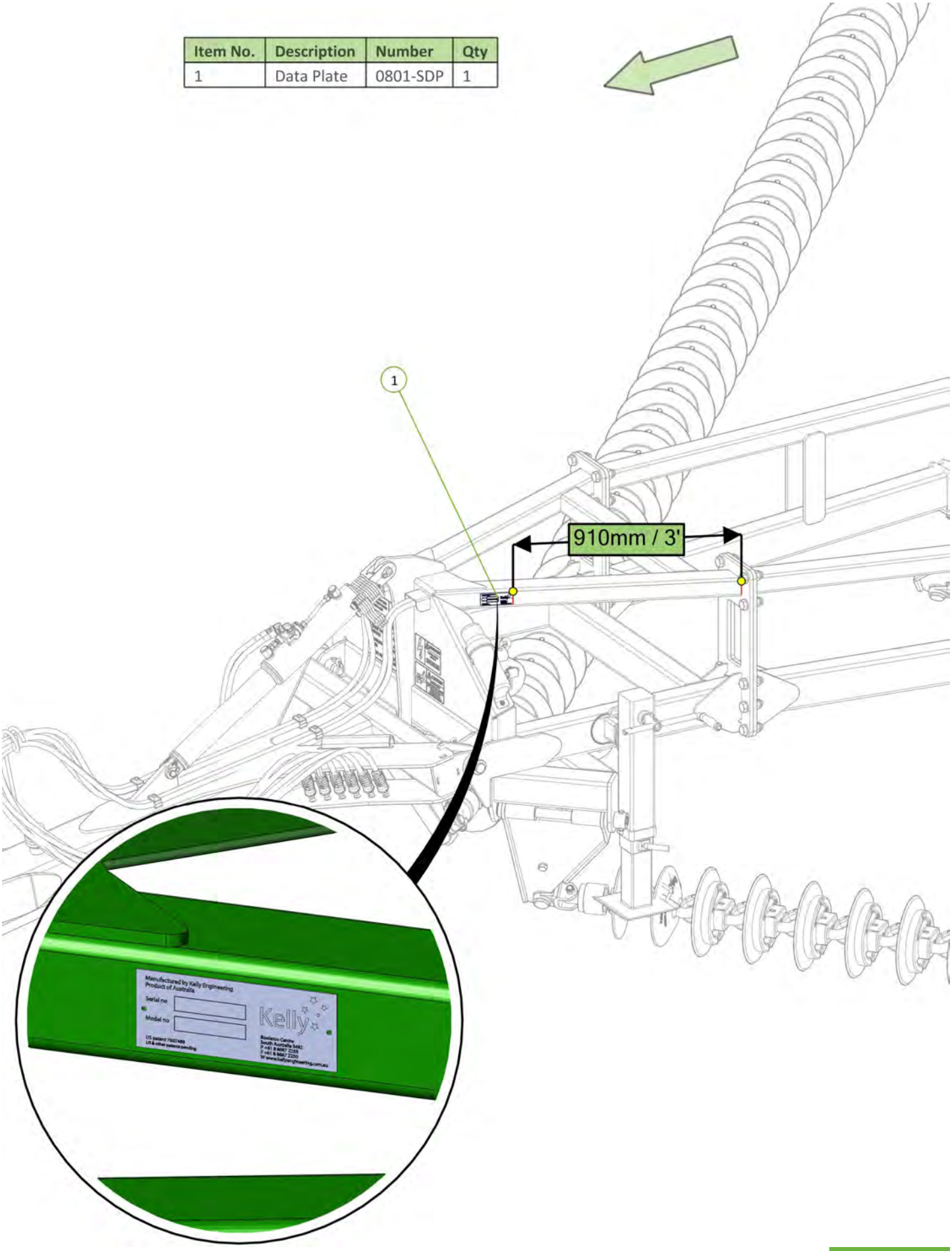

Item No.	Description	Number	Qty
1	Kelly Engineering Decal	0801-S12	2

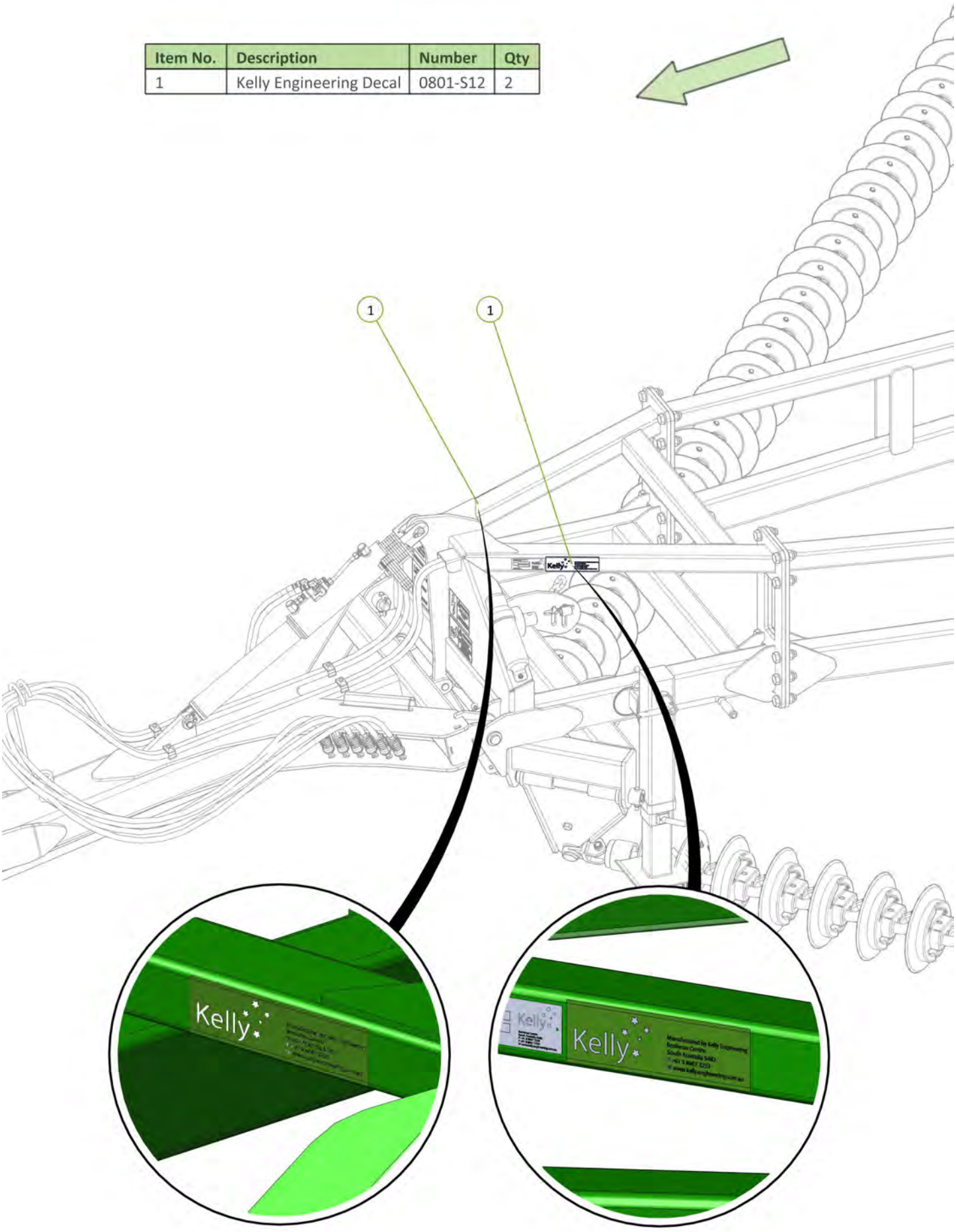

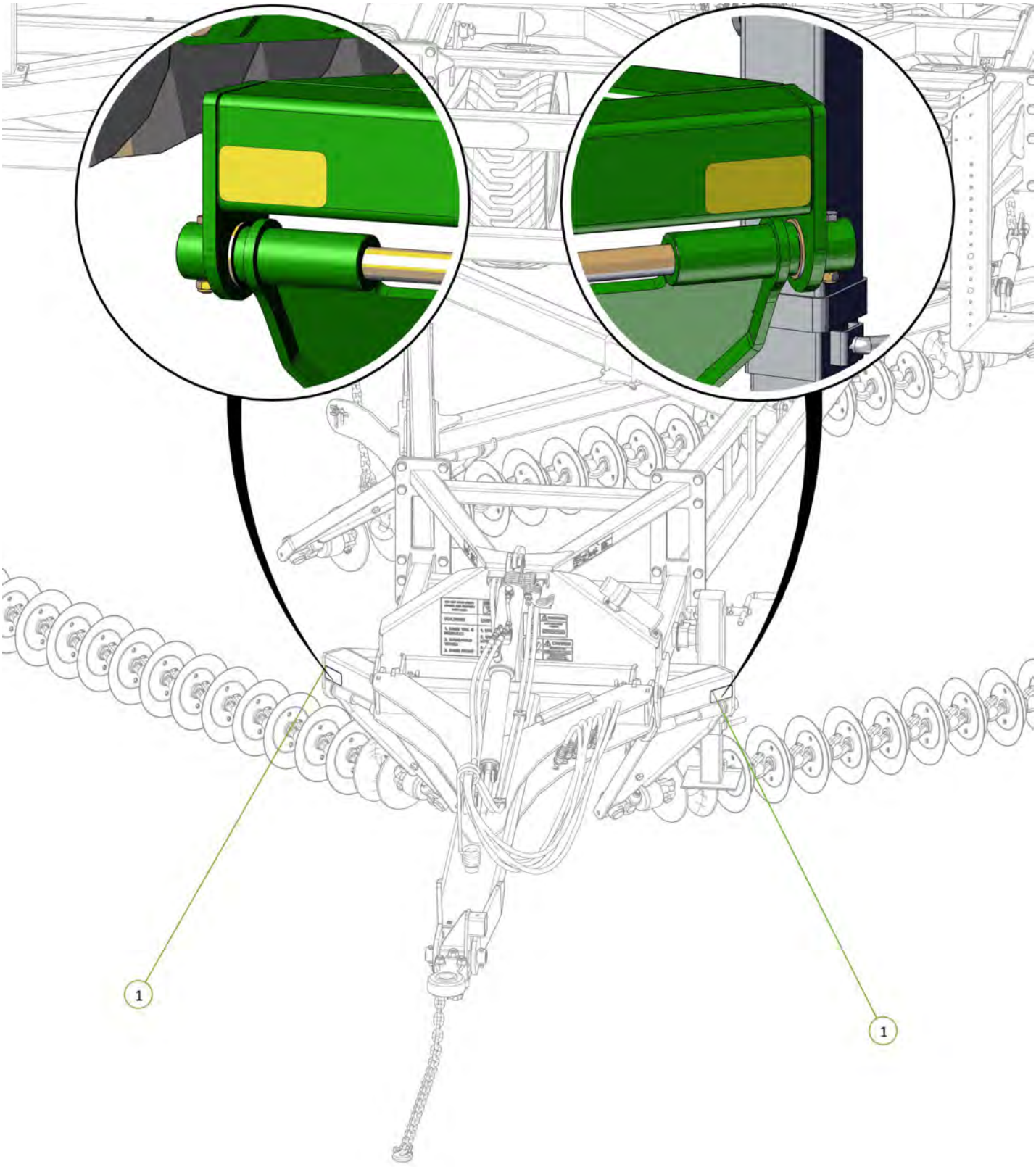

Item No.	Description	Number	Qty
1	Yellow Reflective Decal	0801-SYRF	2

Item No.	Description	Number	Qty
1	Diamond Harrow 4614 Decal	0801-SKDH4614	1

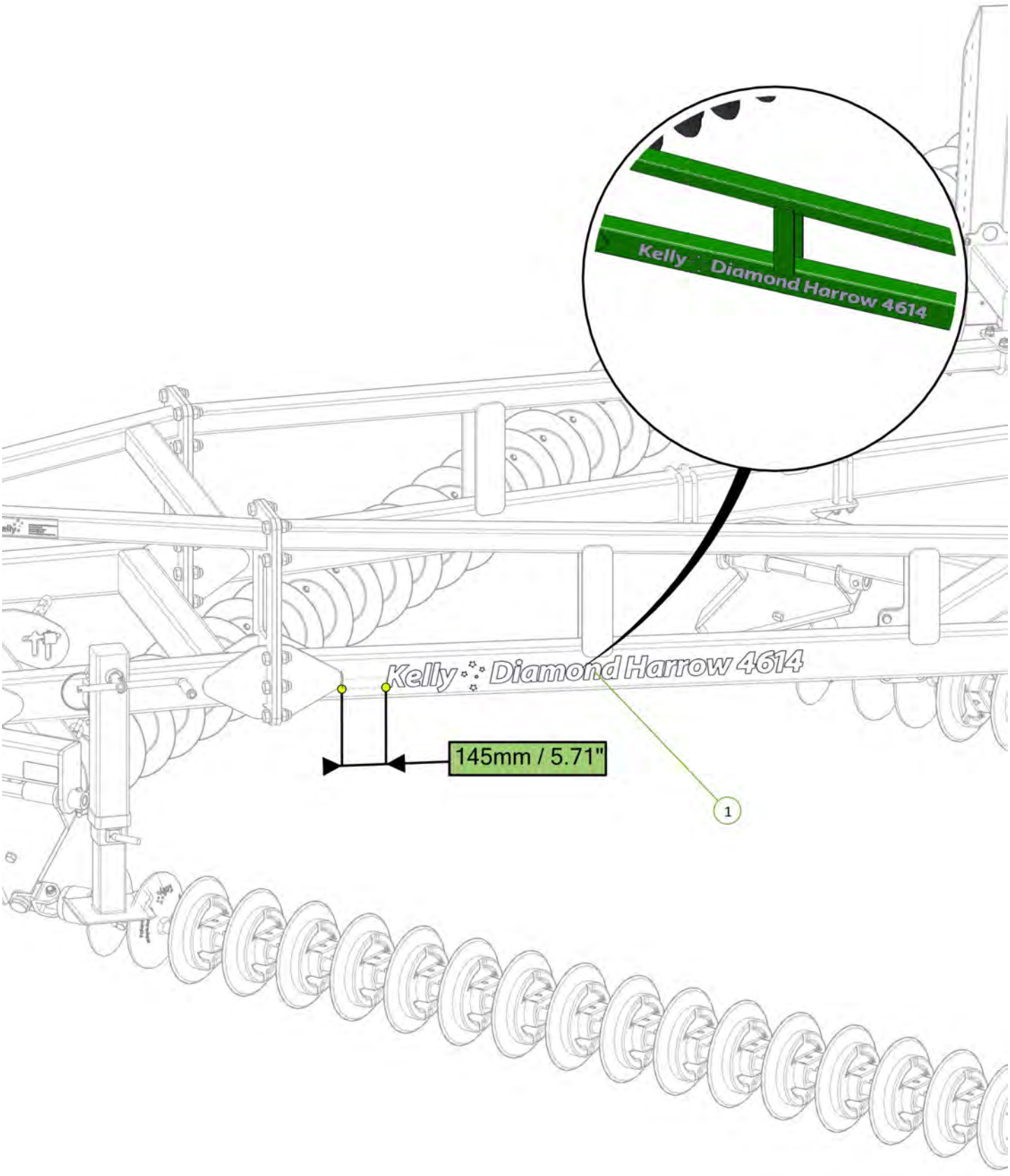

Item No.	Description	Number	Qty
1	Diamond Harrow 4614 Decal	0801-SKDH4614	1
2	Chain Tension 330mm Decal	0801-S15	1

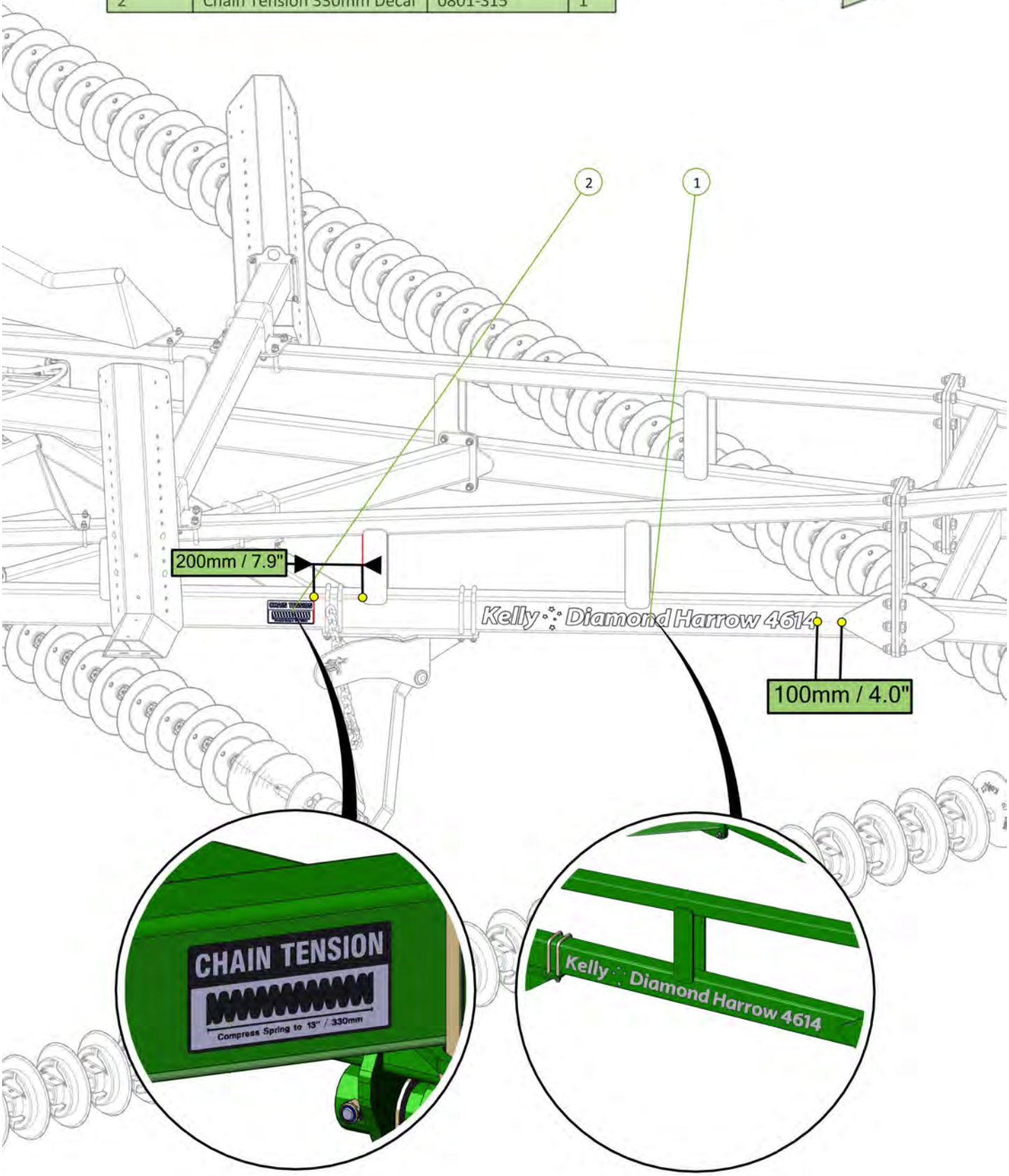

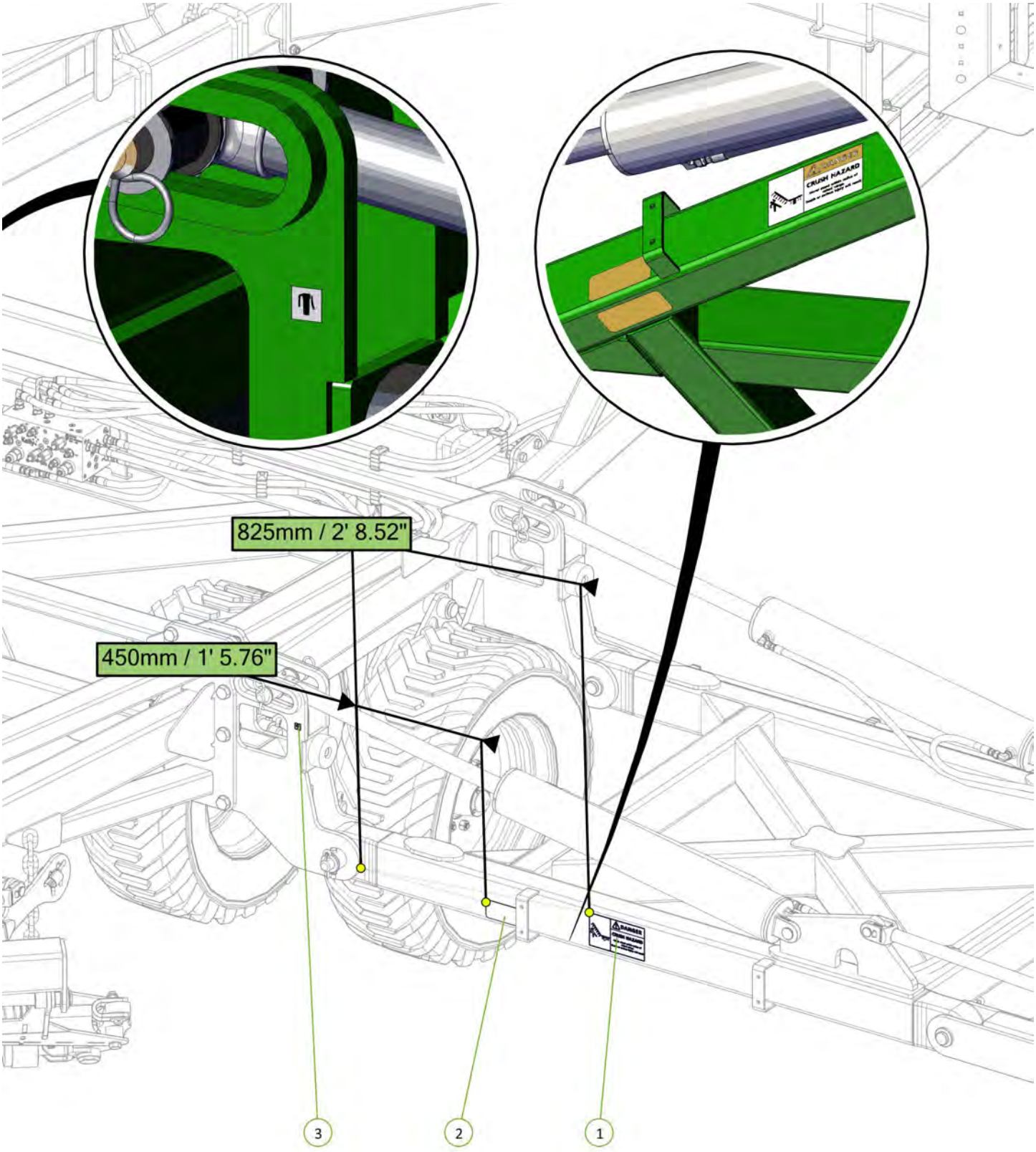

Item No.	Description	Number	Qty
1	Danger Crush Hazard Decal	0801-S3	1
2	Yellow Reflective Decal	0801-SYRF	2
3	Grease Decal	0801-S10	1

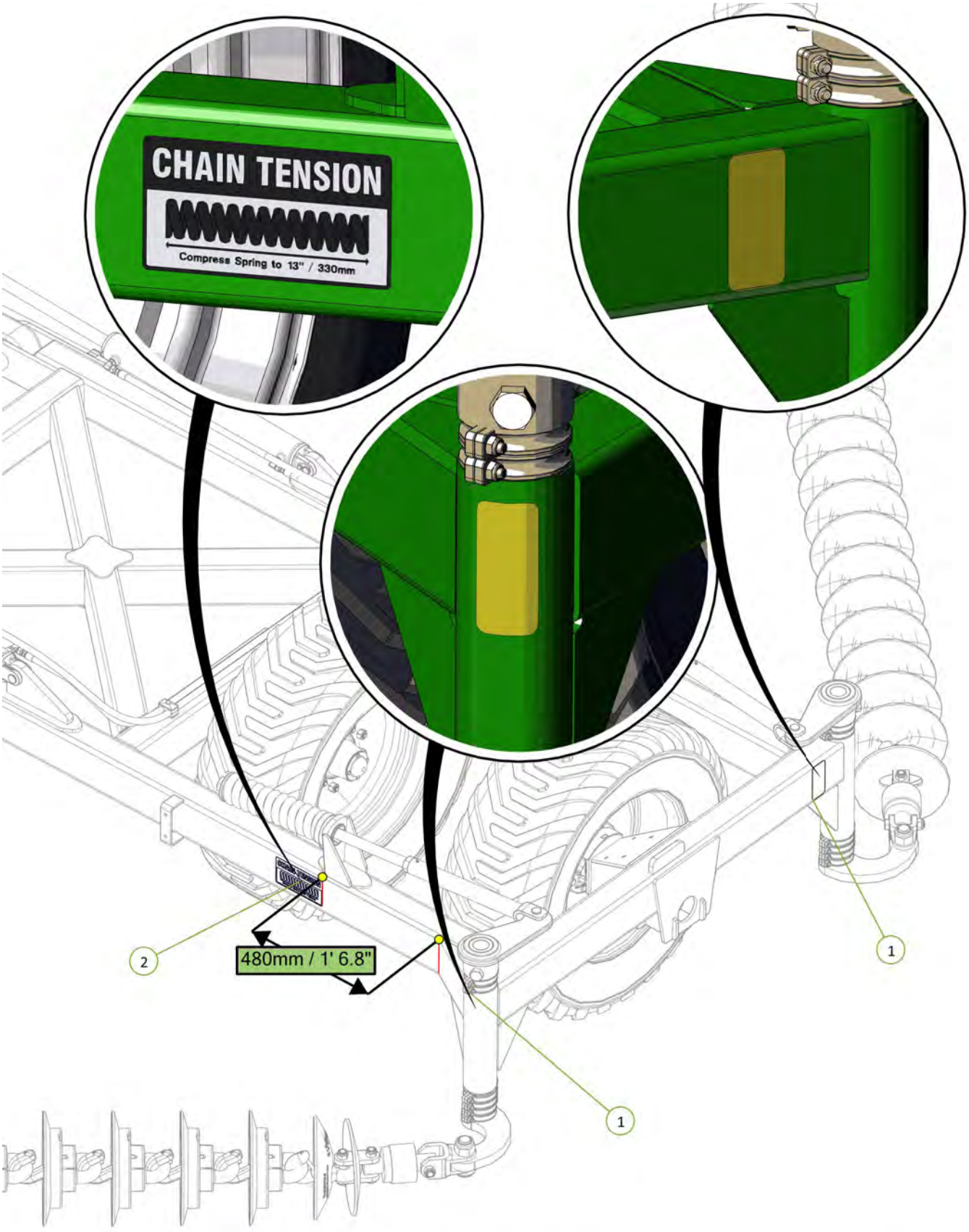

Item No.	Description	Number	Qty
1	Yellow Reflective Decal	0801-SYRF	2
2	Chain Tension 330mm Decal	0801-S15	1

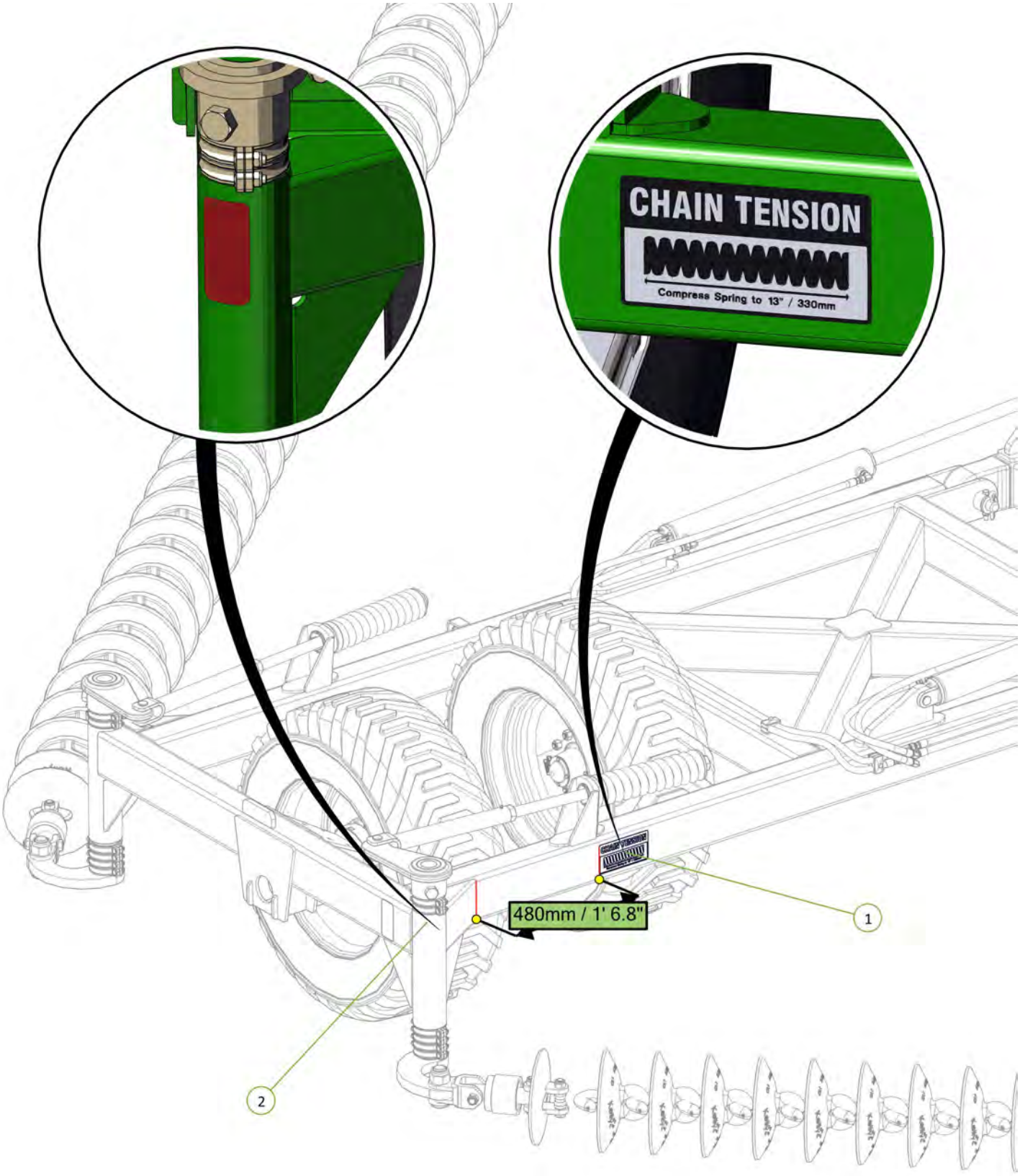

Item No.	Description	Number	Qty
1	Chain Tension 330mm Decal	0801-S15	1
2	Red Reflective Decal	0801-SRRF	1

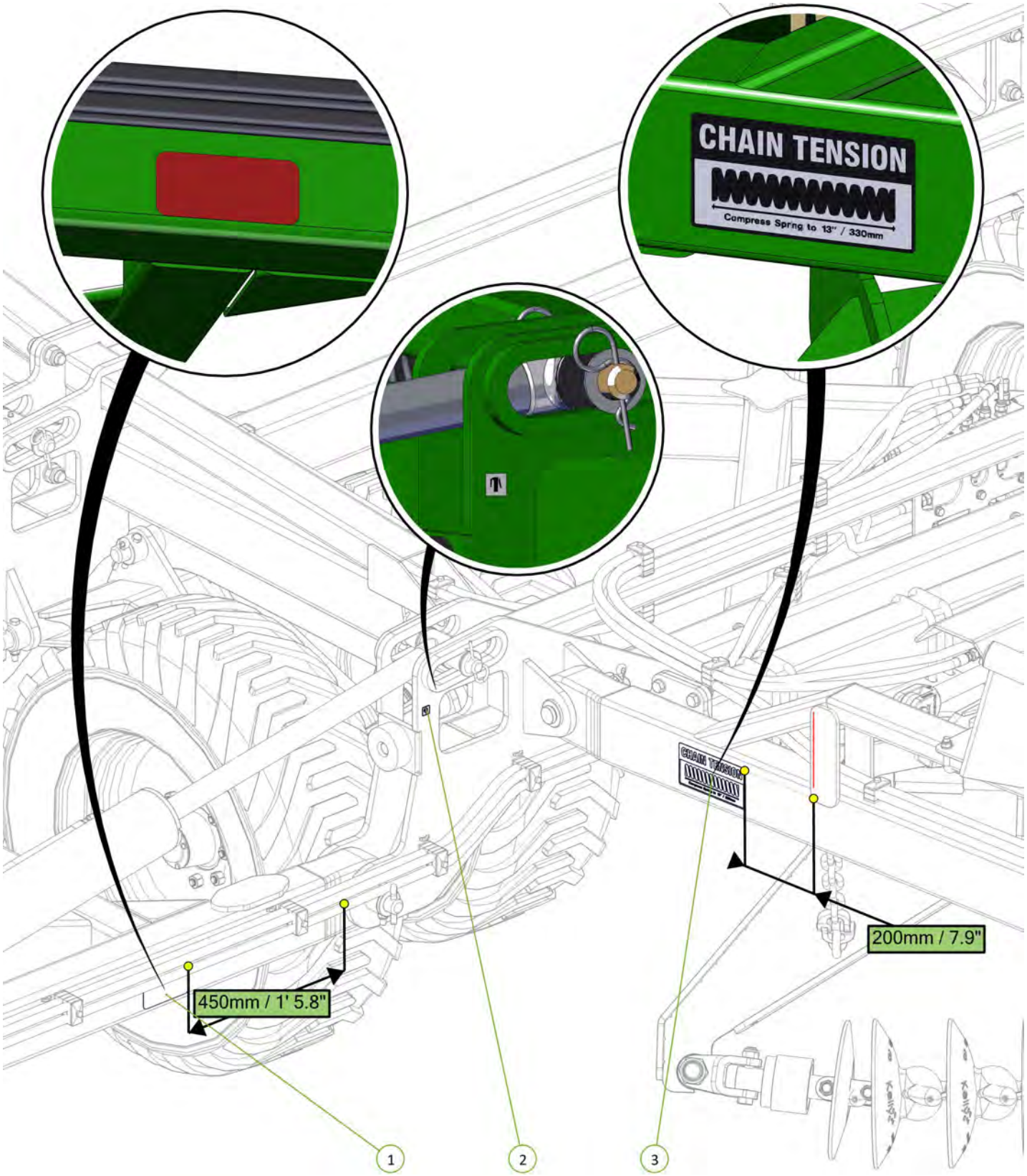

Item No.	Description	Number	Qty
1	Red Reflective Decal	0801-SRRF	1
2	Grease Decal	0801-S10	1
3	Chain Tension 330mm Decal	0801-S15	1

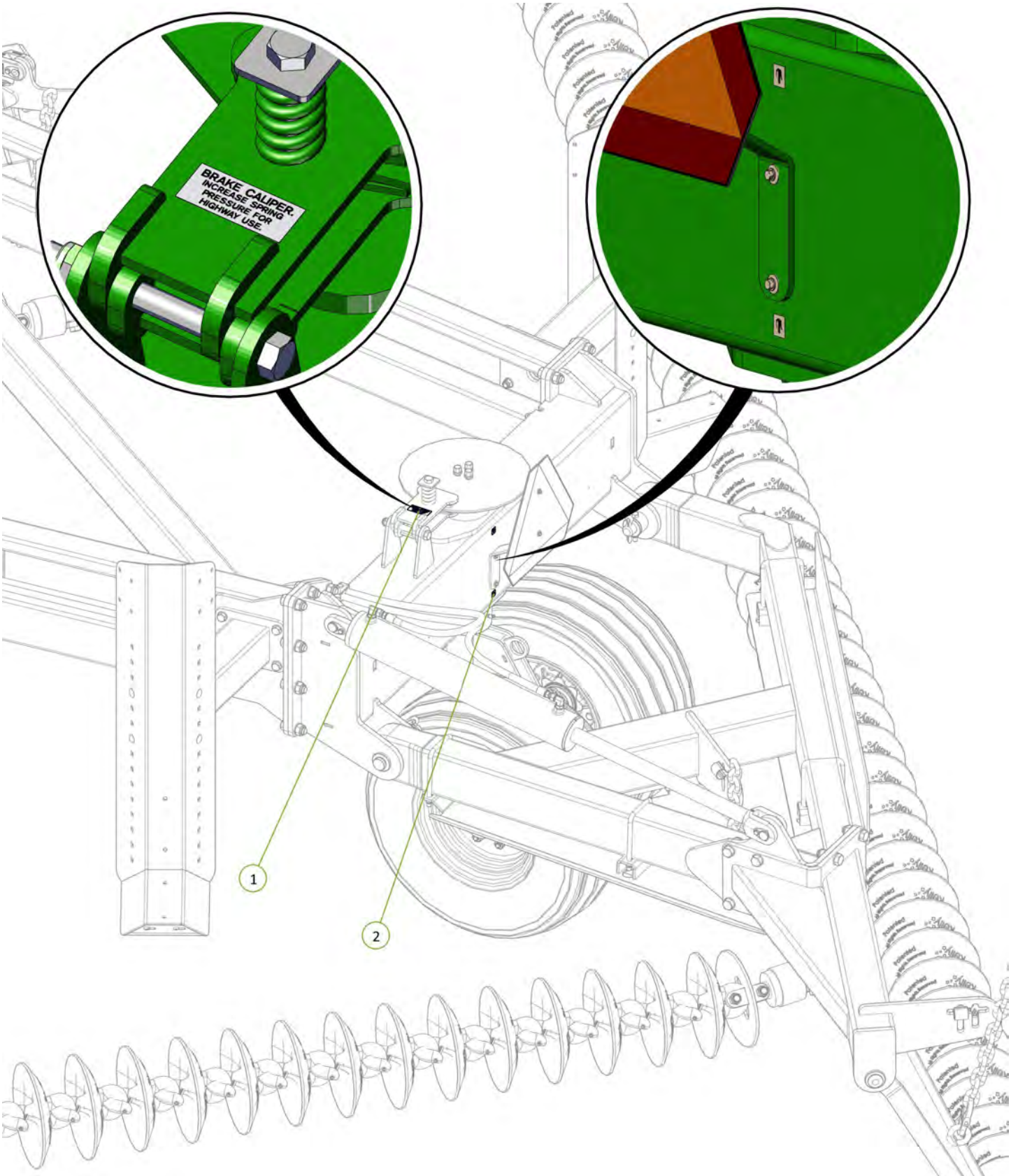

Item No.	Description	Number	Qty
1	Brake Caliper Decal	0801-S11	1
2	Grease Decal	0801-S10	2

Item No.	Description	Number	Qty
1	Yellow Reflective Decal	0801-SYRF	1

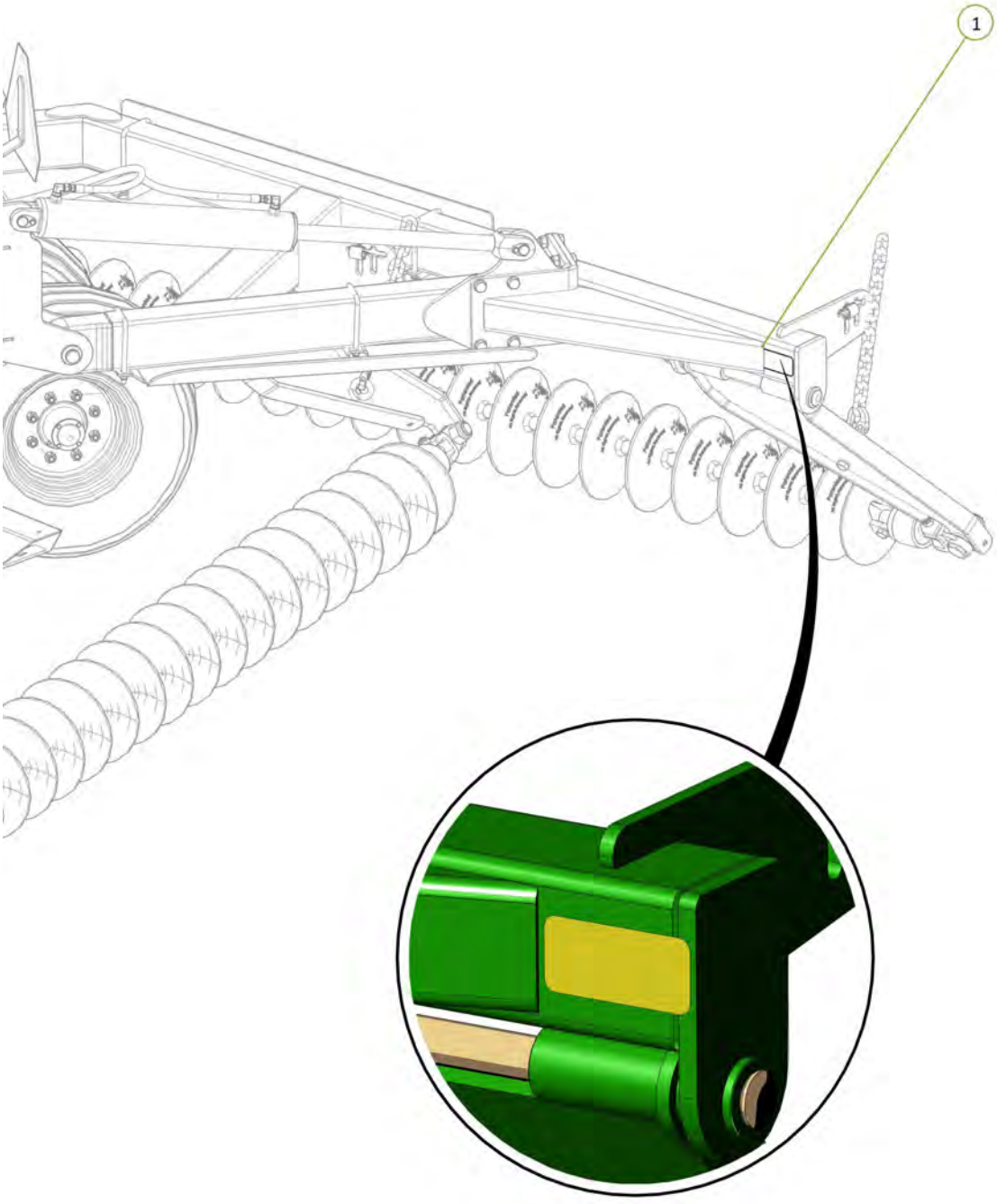

Item No.	Description	Number	Qty
1	Yellow Reflective Decal	0801-SYRF	1

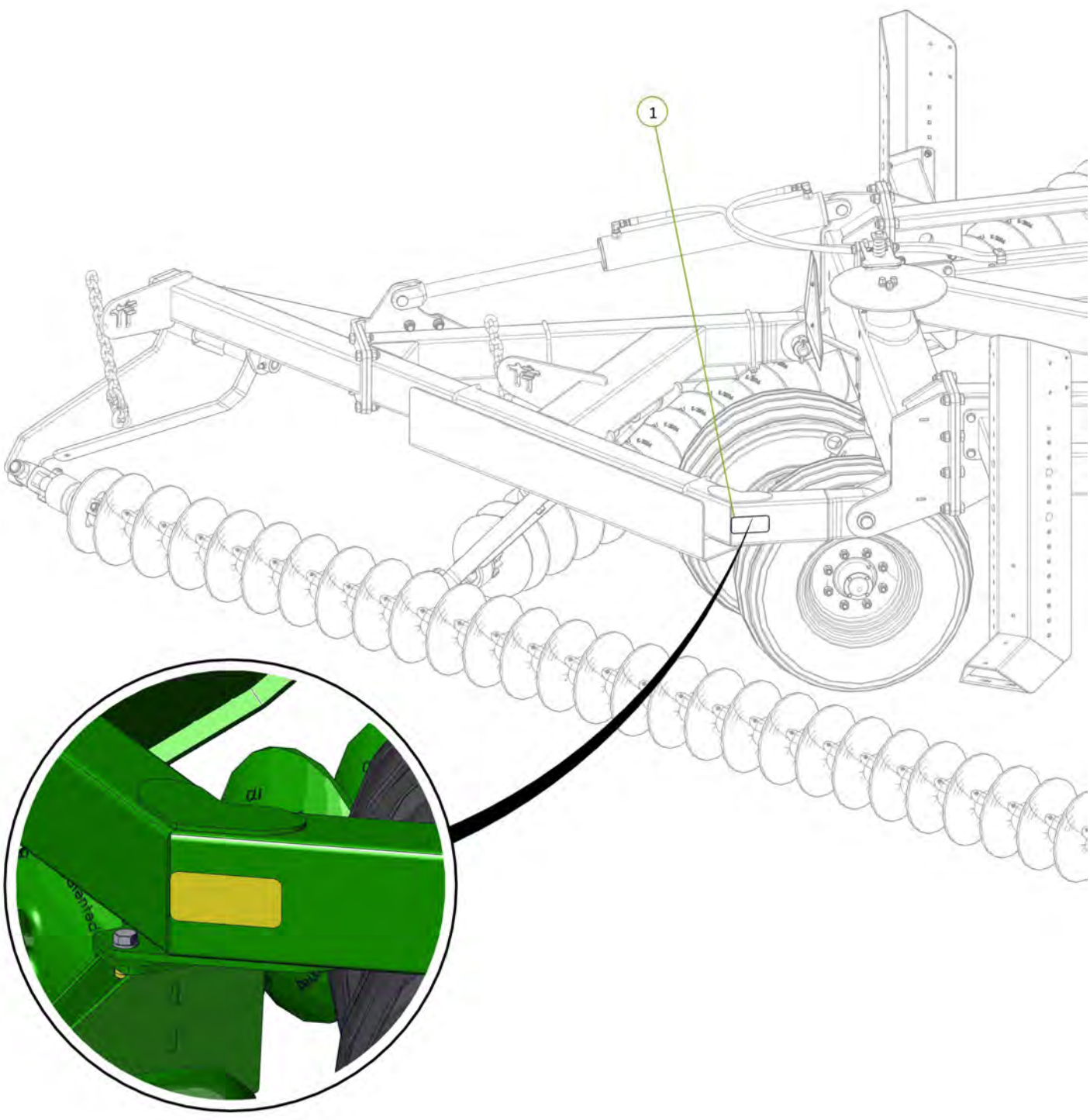

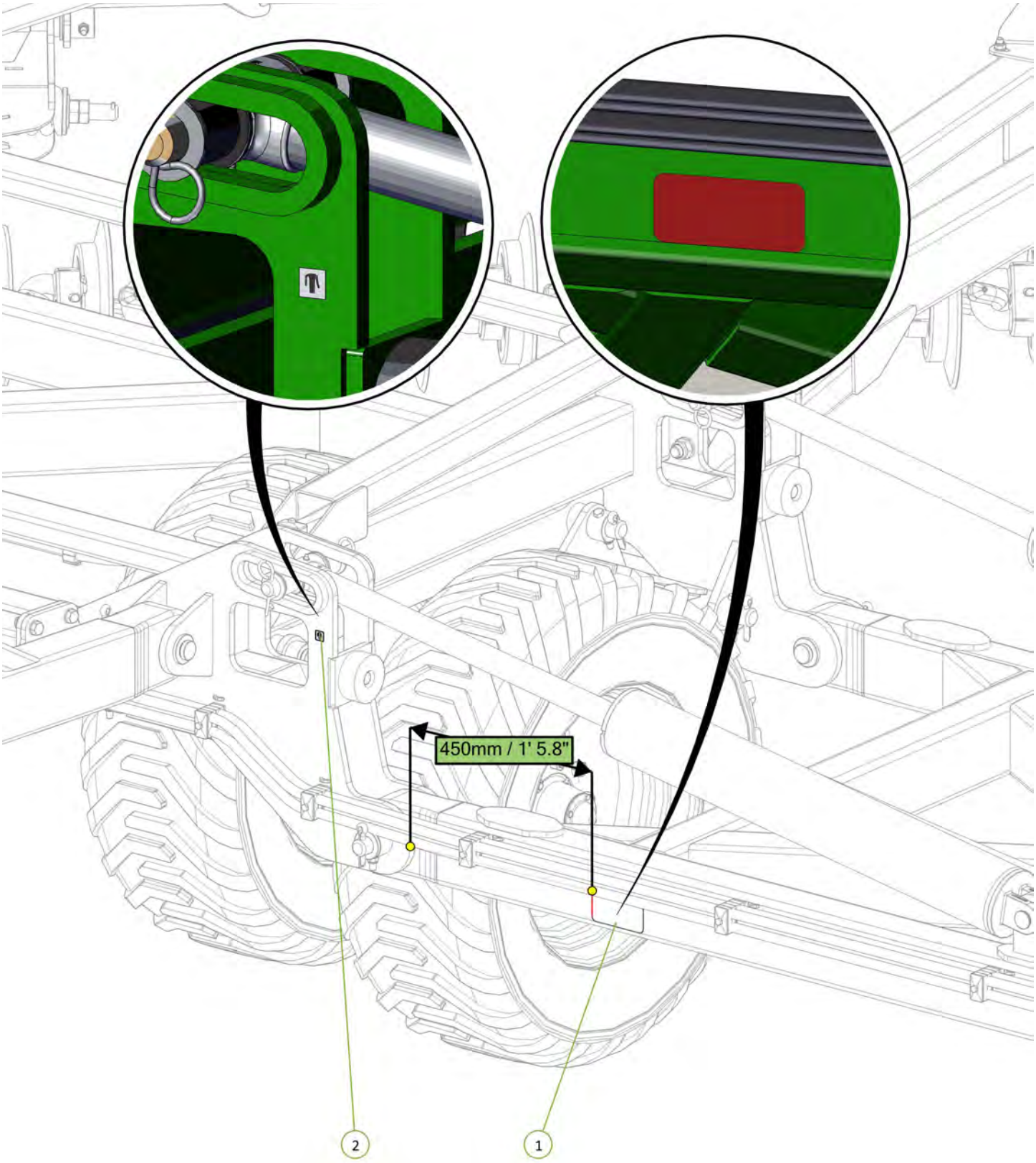

Item No.	Description	Number	Qty
1	Red Reflective Decal	0801-SRRF	1
2	Grease Decal	0801-S10	1

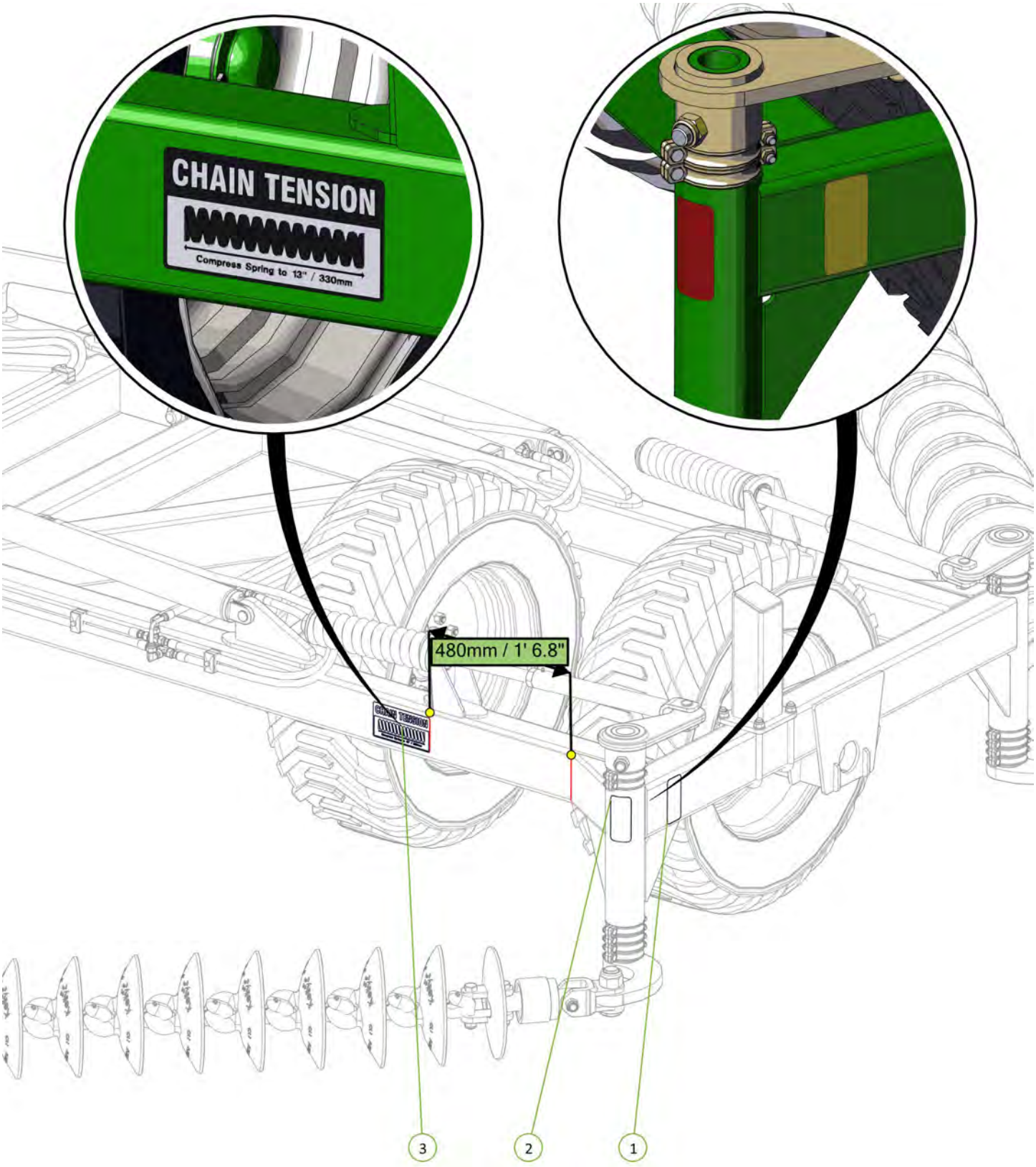

Item No.	Description	Number	Qty
1	Yellow Reflective Decal	0801-SYRF	1
2	Red Reflective Decal	0801-SRRF	1
3	Chain Tension 330mm Decal	0801-S15	1

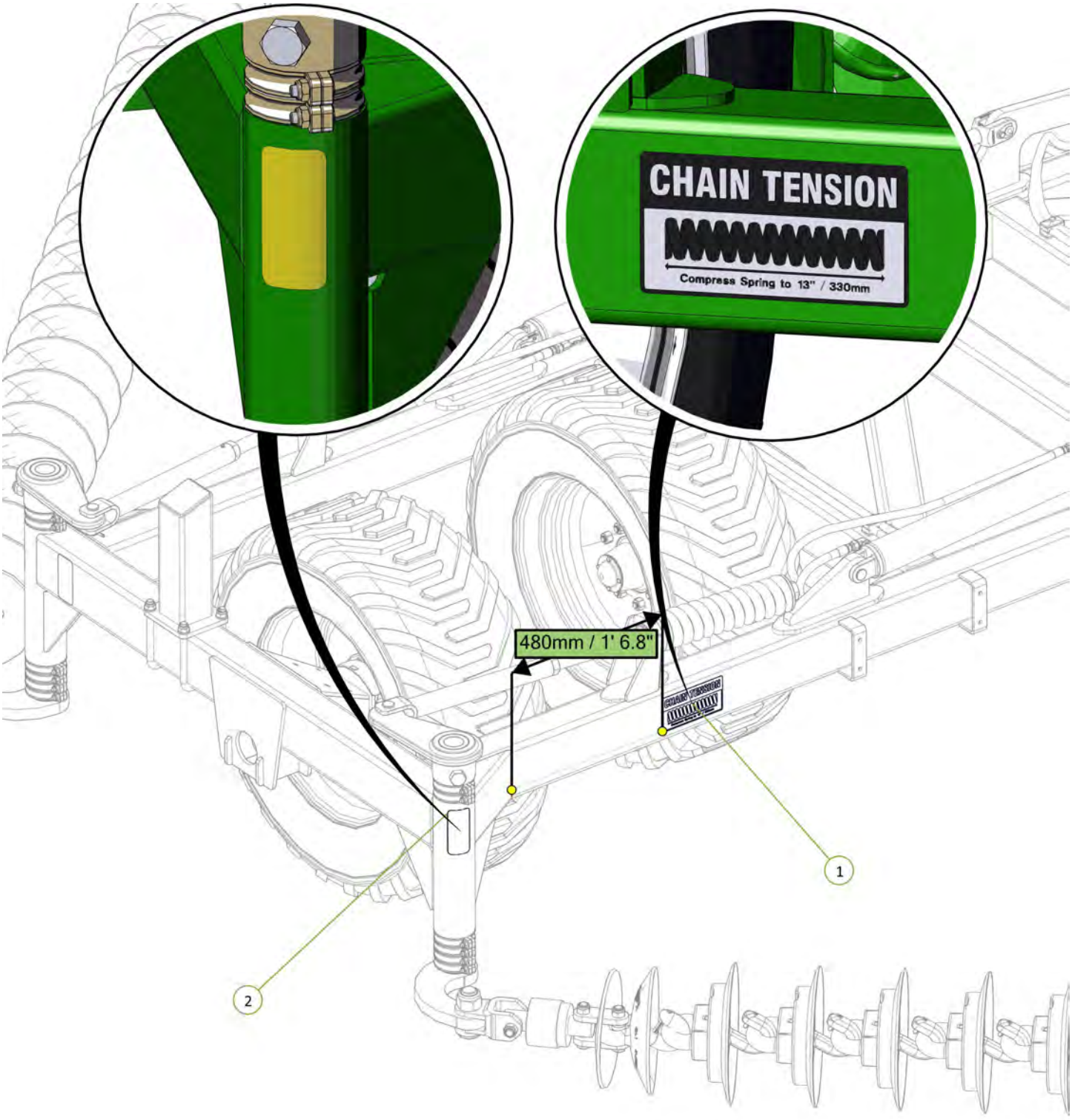

Item No.	Description	Number	Qty
1	Chain Tension 330mm Decal	0801-S15	1
2	Yellow Reflective Decal	0801-SYRF	1

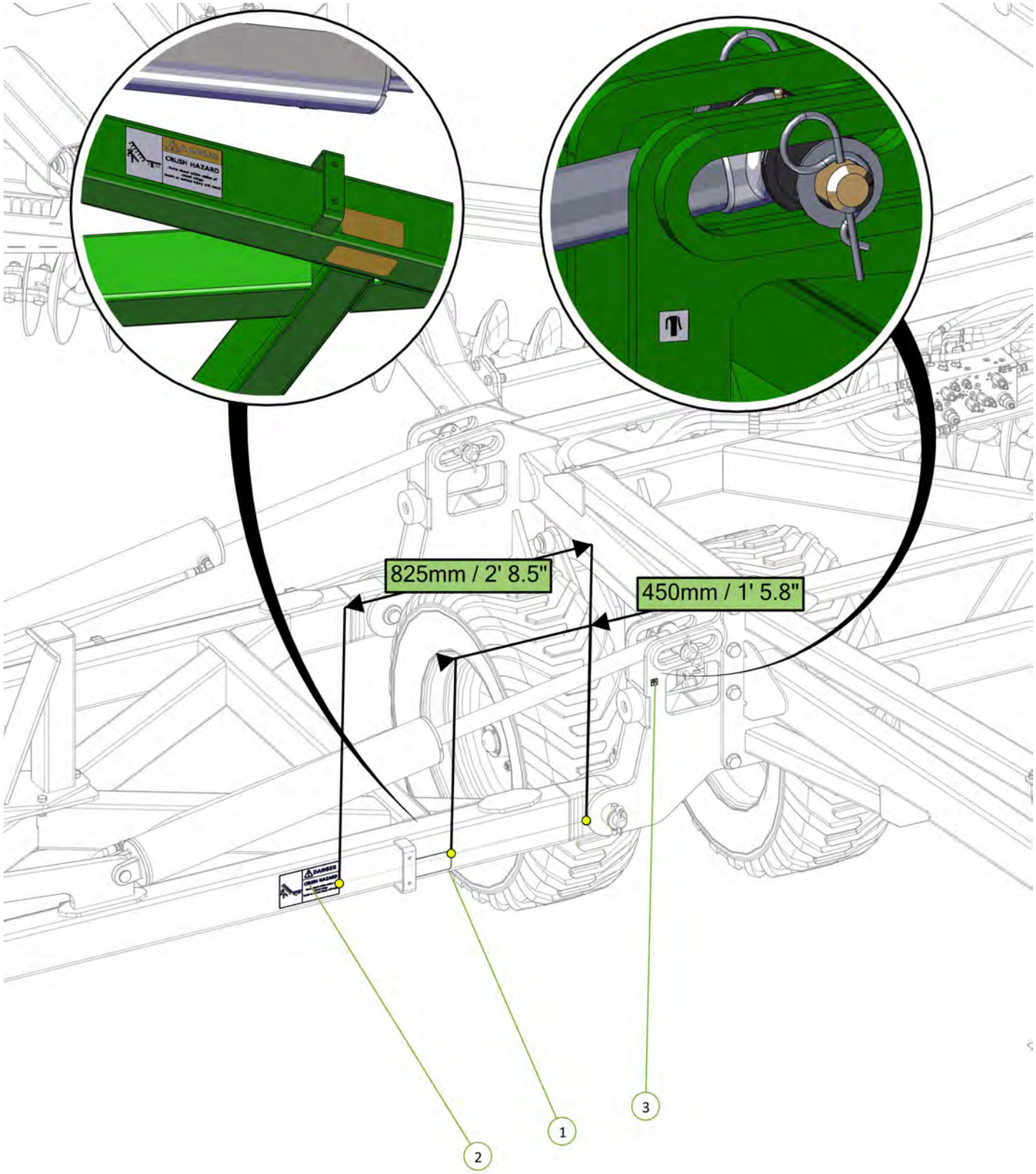

Item No.	Description	Number	Qty
1	Yellow Reflective Decal	0801-SYRF	2
2	Danger Crush Hazard Decal	0801-S3	1
3	Grease Decal	0801-S10	1

Item No.	Description	Number	Qty
1	400/55/22.5 Tyre Inflation Decal	0801-S8-400-55-22.5	8
2	Wheel Nut Decal	0801-S9	8

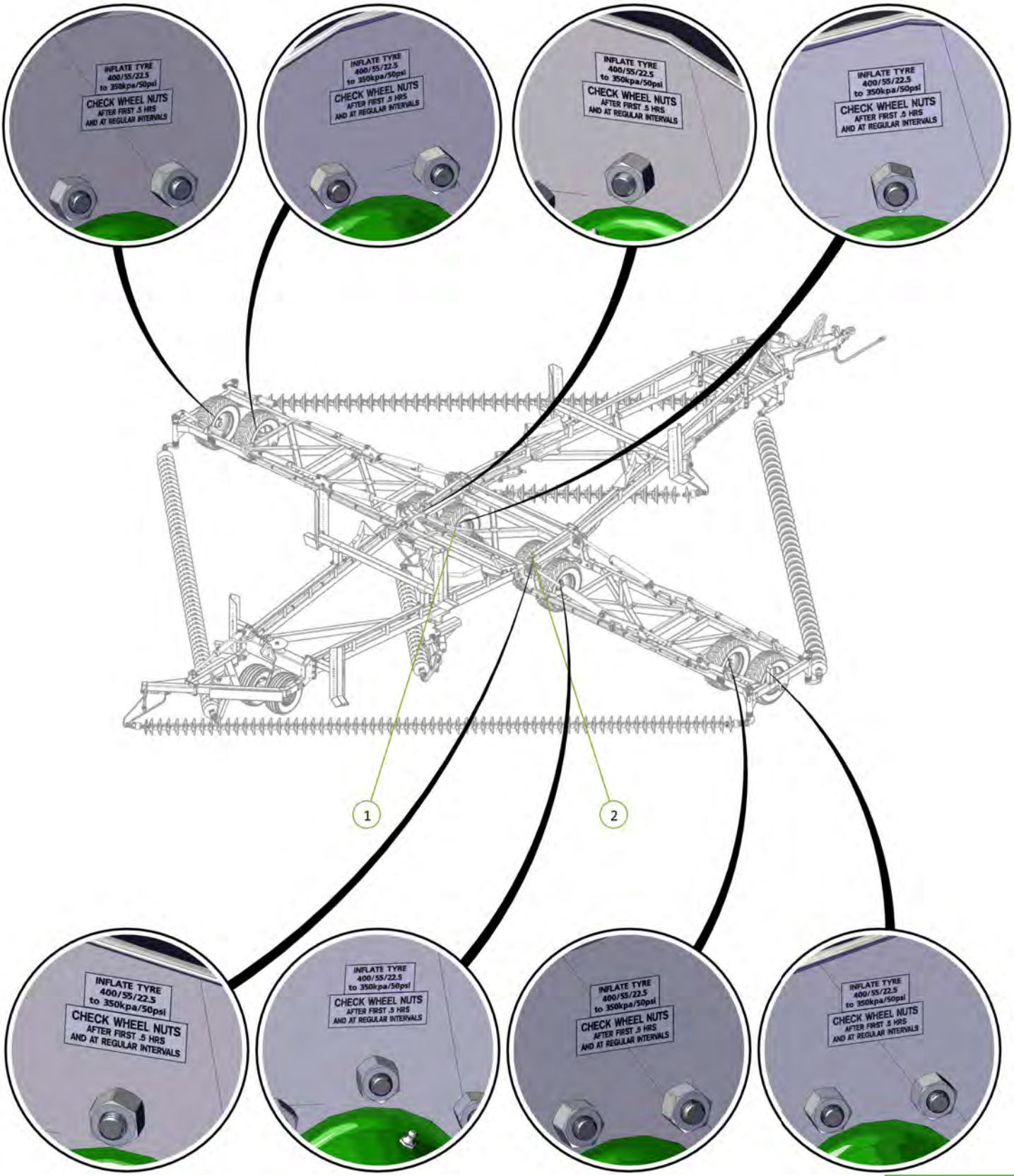

Item No.	Description	Number	Qty
1	Decal, 31/13.5/15 Tyre Inflation	0801-S8-31-13.5-15	2
2	Wheel Nut Decal	0801-S9	2

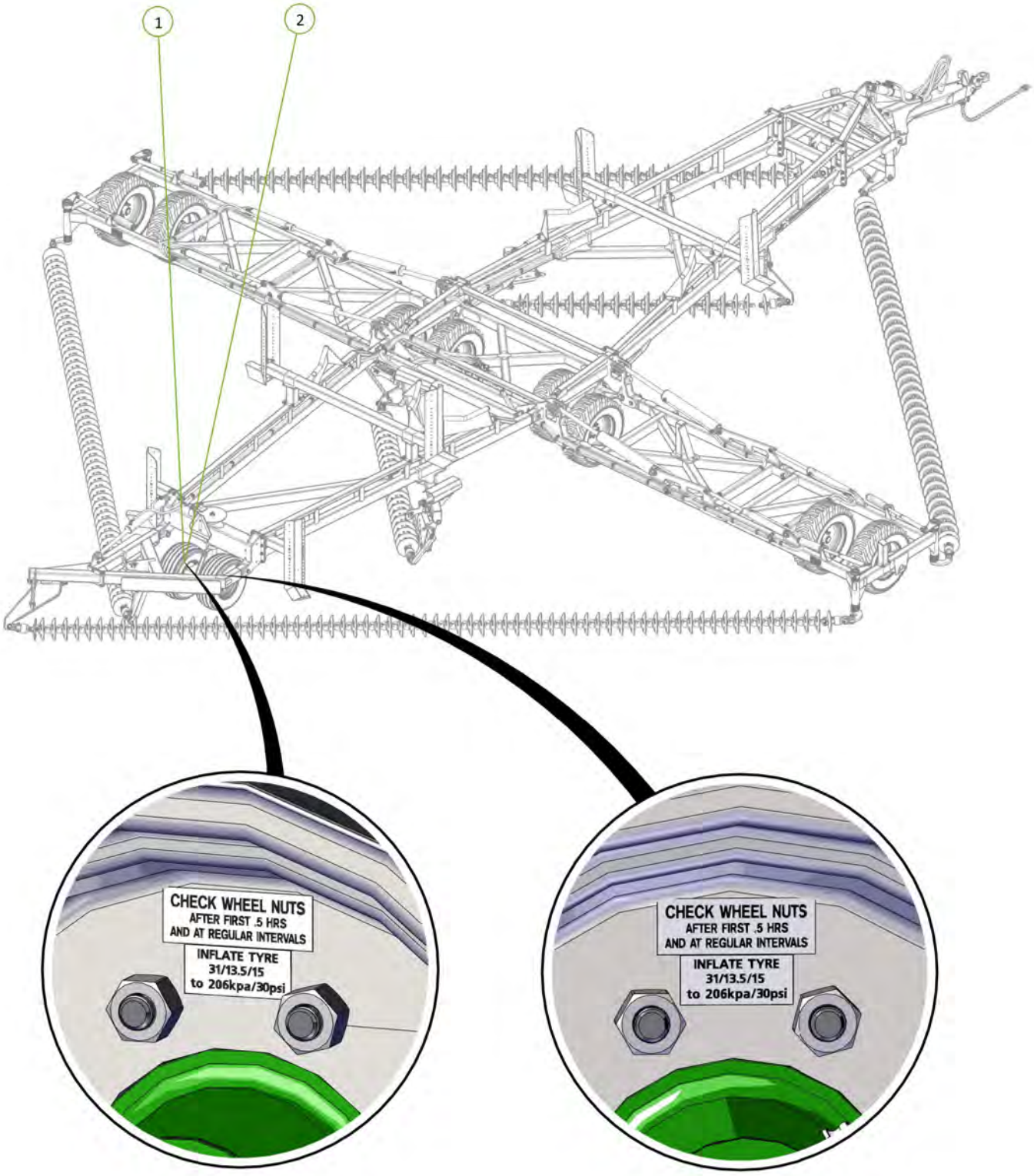

Section 4
Light Kit

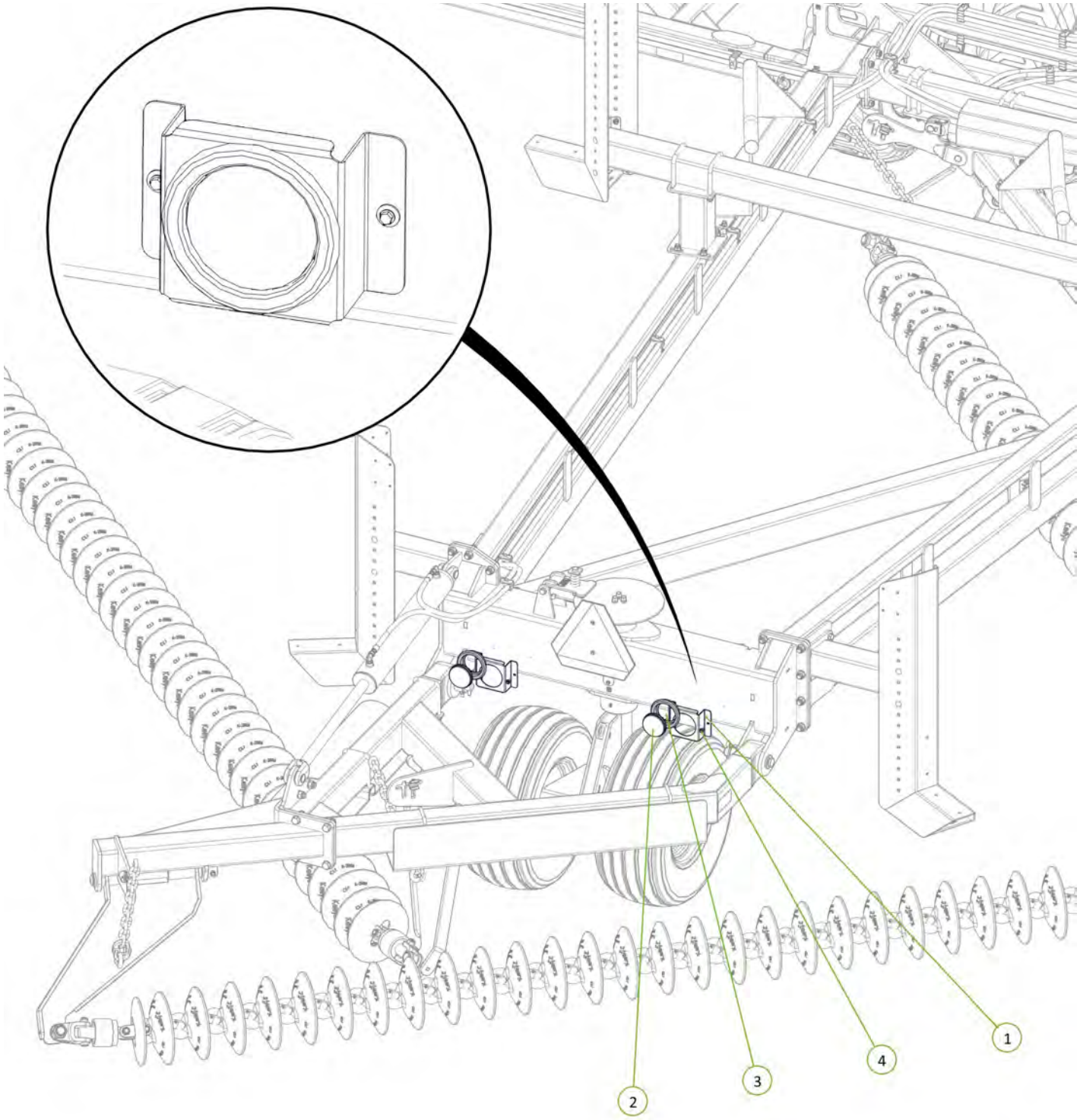

Item No.	Description	Qty	Number
1	US Tail Light Bracket	2	0800-194.1
2	LED Stop Tail Lamp	2	0412-LED110RM
3	110RM Rubber Grommet	2	0412-53101RG
4	M6 x 20mm Trilobe Screw	4	0211-M620MZPHTF

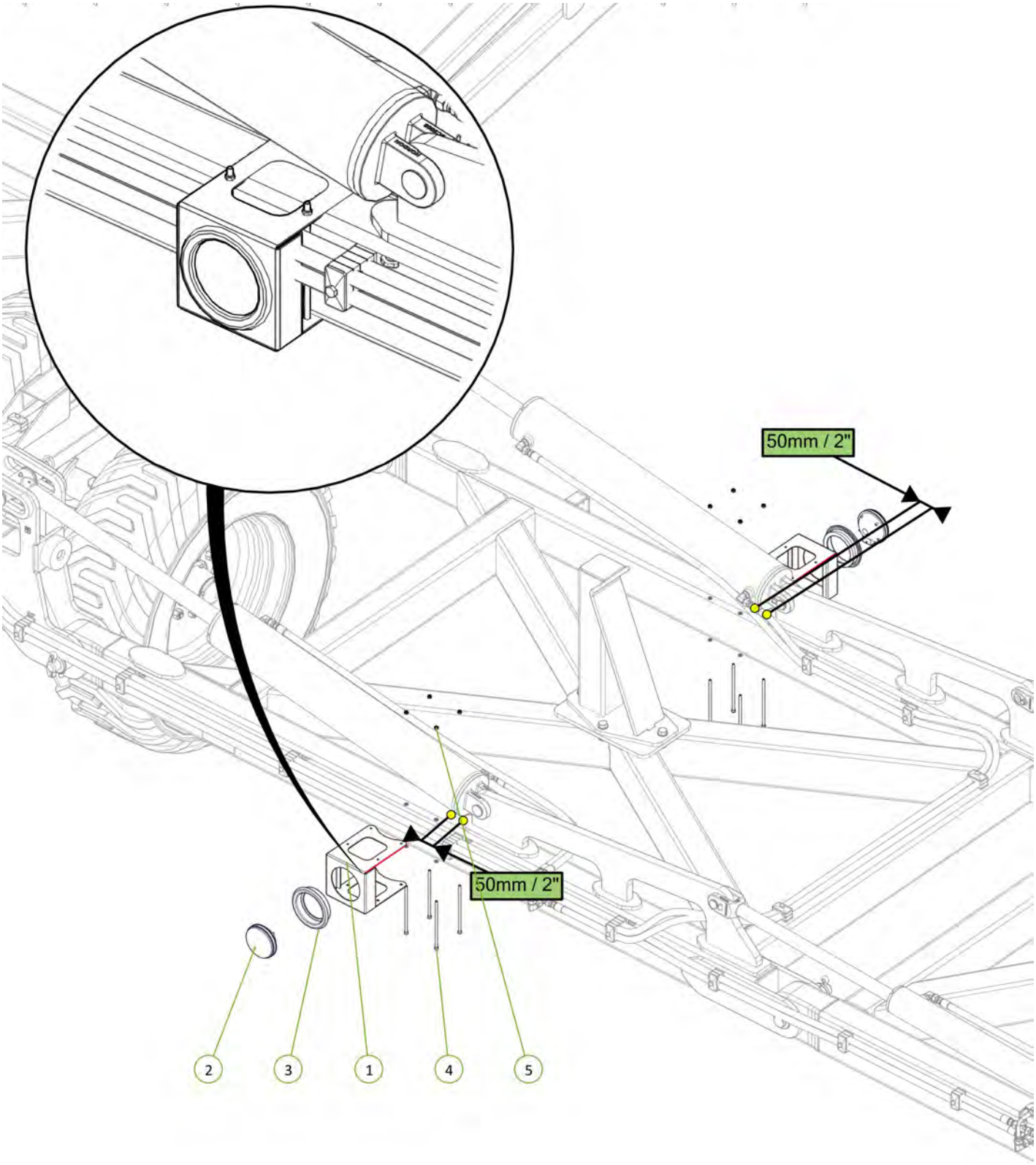

Item No.	Description	Qty	Number
1	Wing light bracket	2	0800-296
2	LED Rear Indicator Lamp	2	0412-LED110AM
3	110RM Rubber Grommet	2	0412-53101RG
4	Socket Head Bolt M6 x 170 zp	8	0211-SH6170
5	Nyloc Nut M6	8	0221-NYL6

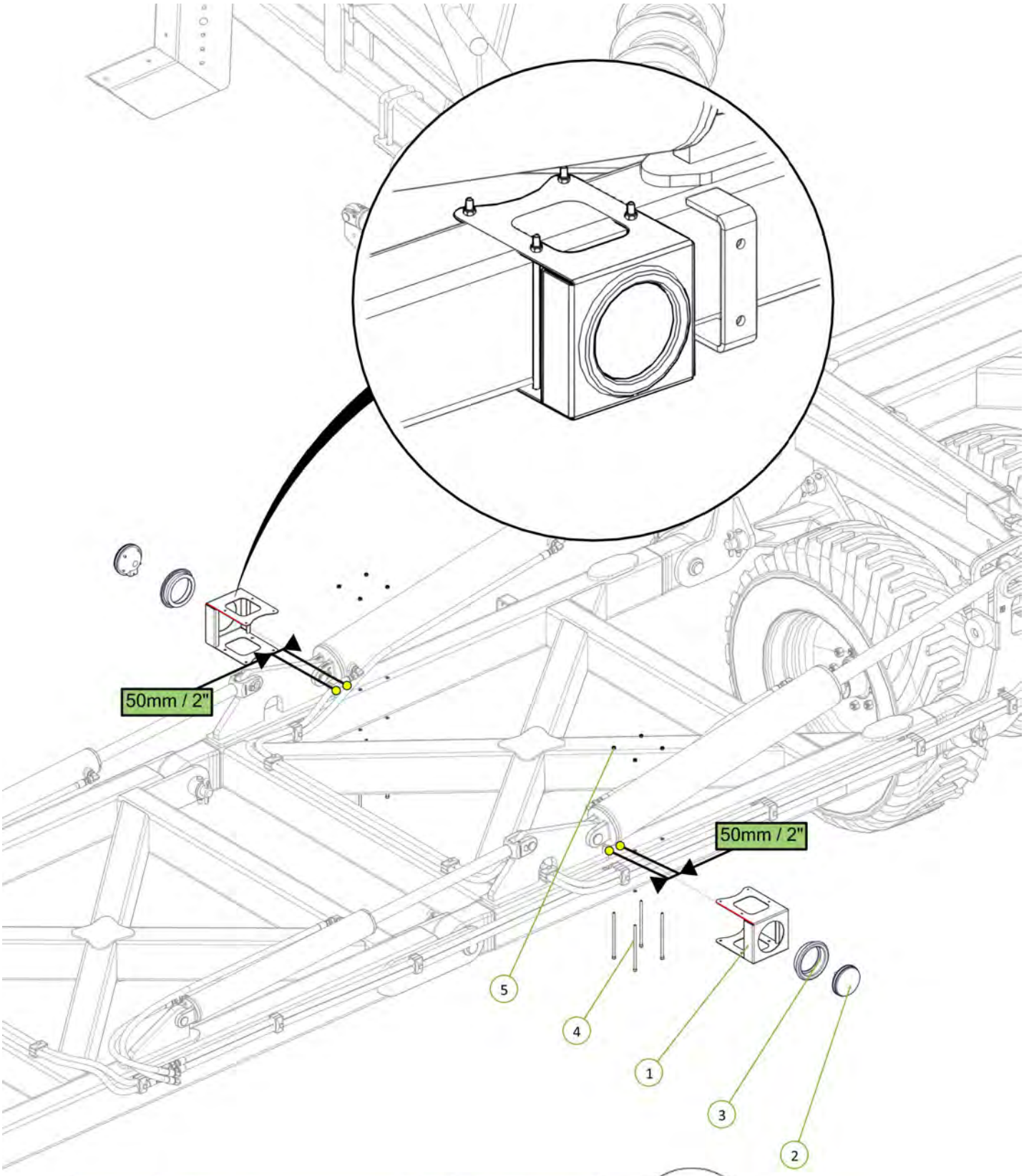

Item No.	Description	Qty	Number
1	Wing light bracket	2	0800-296
2	LED Rear Indicator Lamp	2	0412-LED110AM
3	110RM Rubber Grommet	2	0412-53101RG
4	Socket Head Bolt M6 x 170 zp	8	0211-SH6170
5	Nyloc Nut M6	8	0221-NYL6

Item No.	Description	Qty	Number
1	Electrical Plug Keeper	1	0416-11750B
2	M6 x 25 Class 8.8 ZP Bolt	2	0211-625
3	Washer Flat M6	2	0231-F6
4	Nyloc Nut M6	2	0221-NYL6

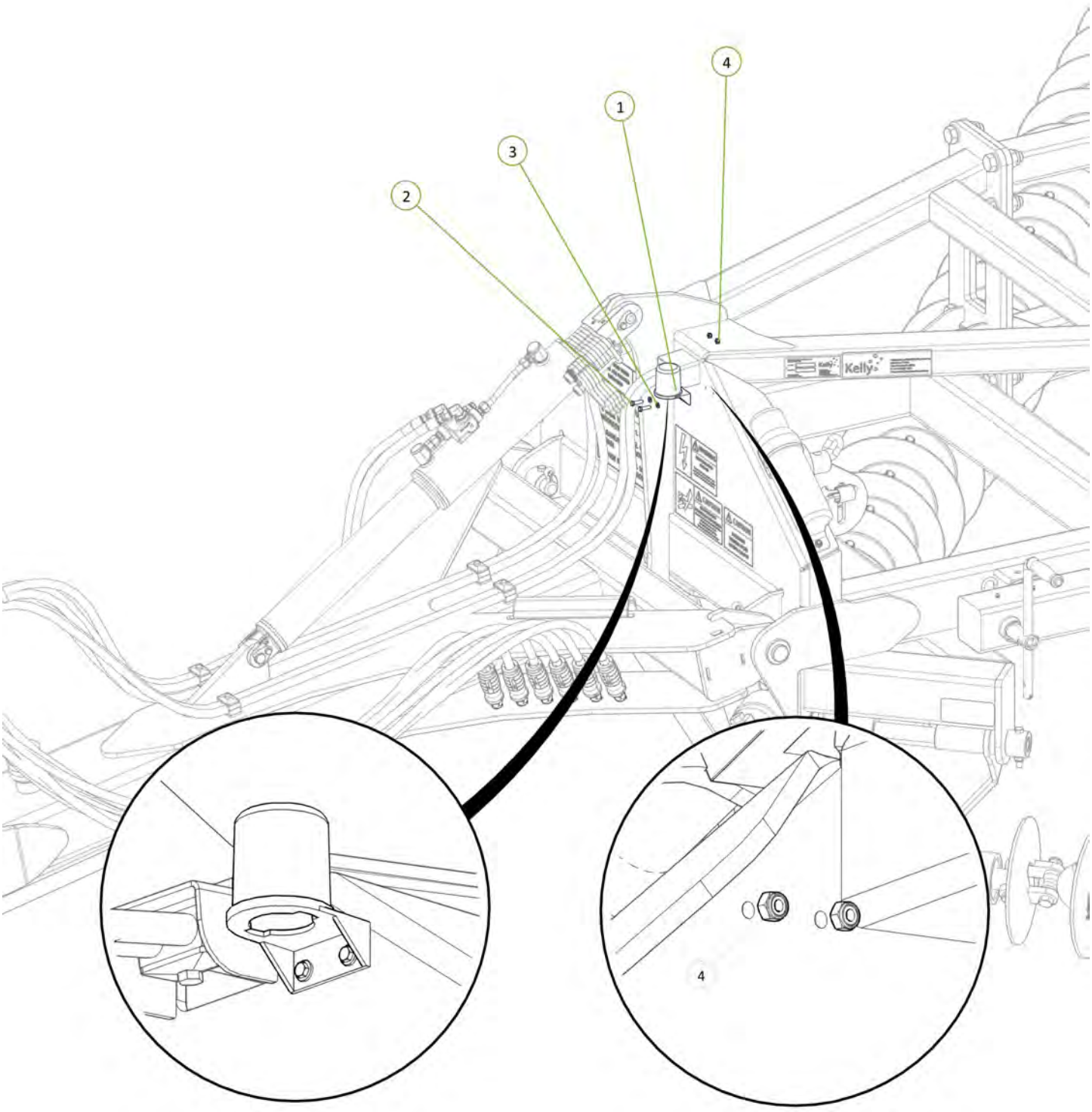

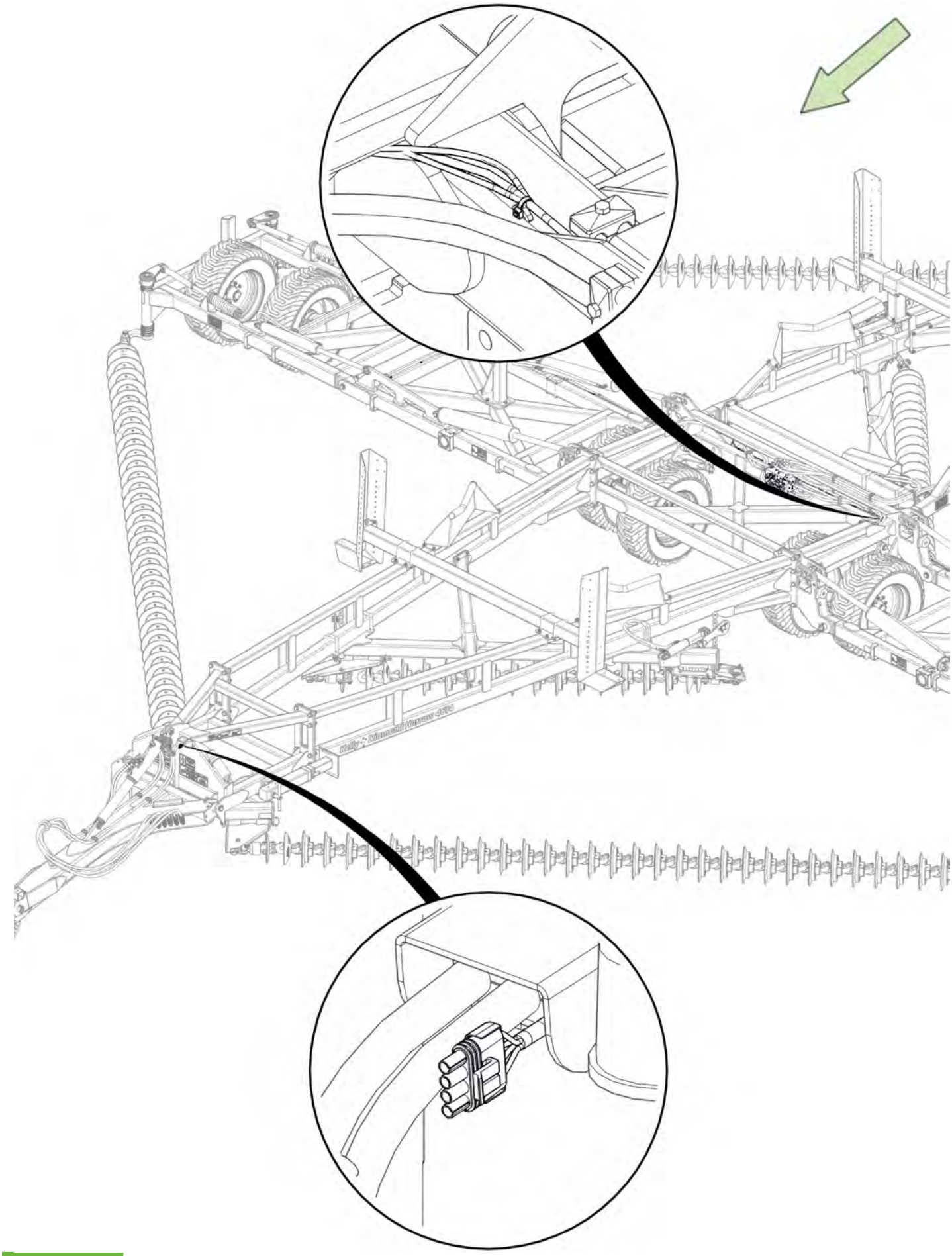

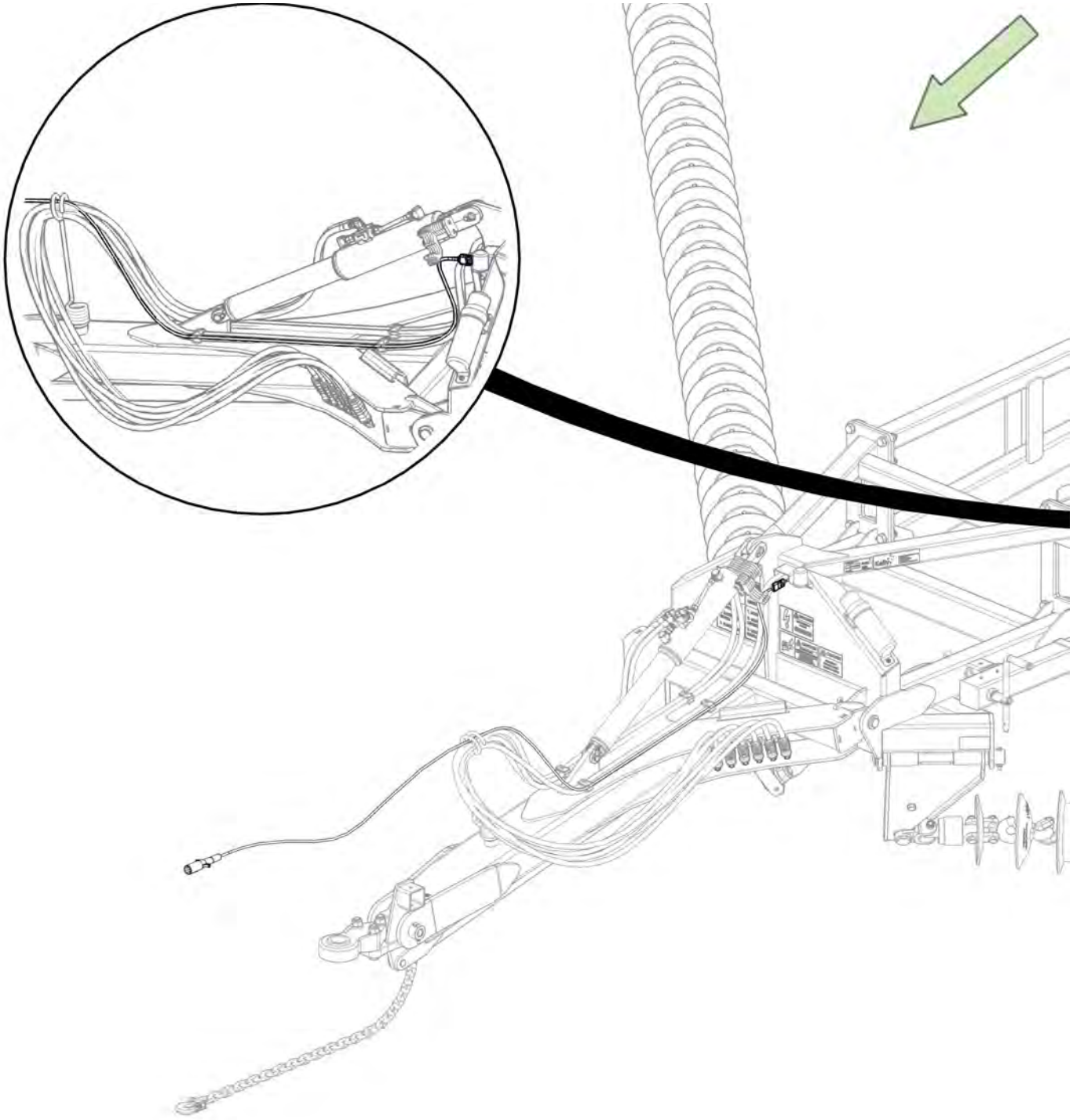

Where required secure loom to hydraulic hoses or tabs provided

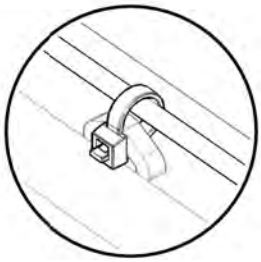

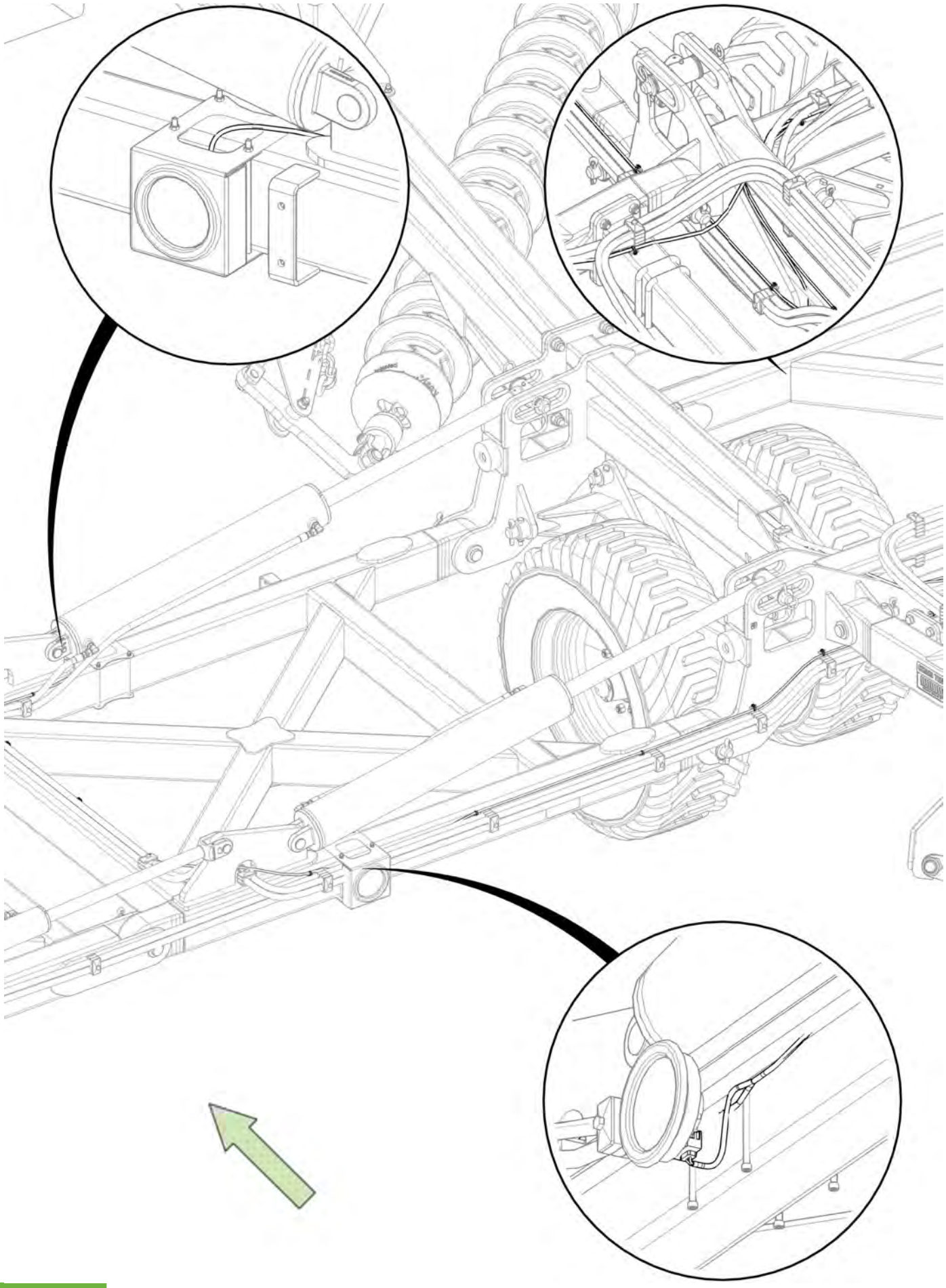

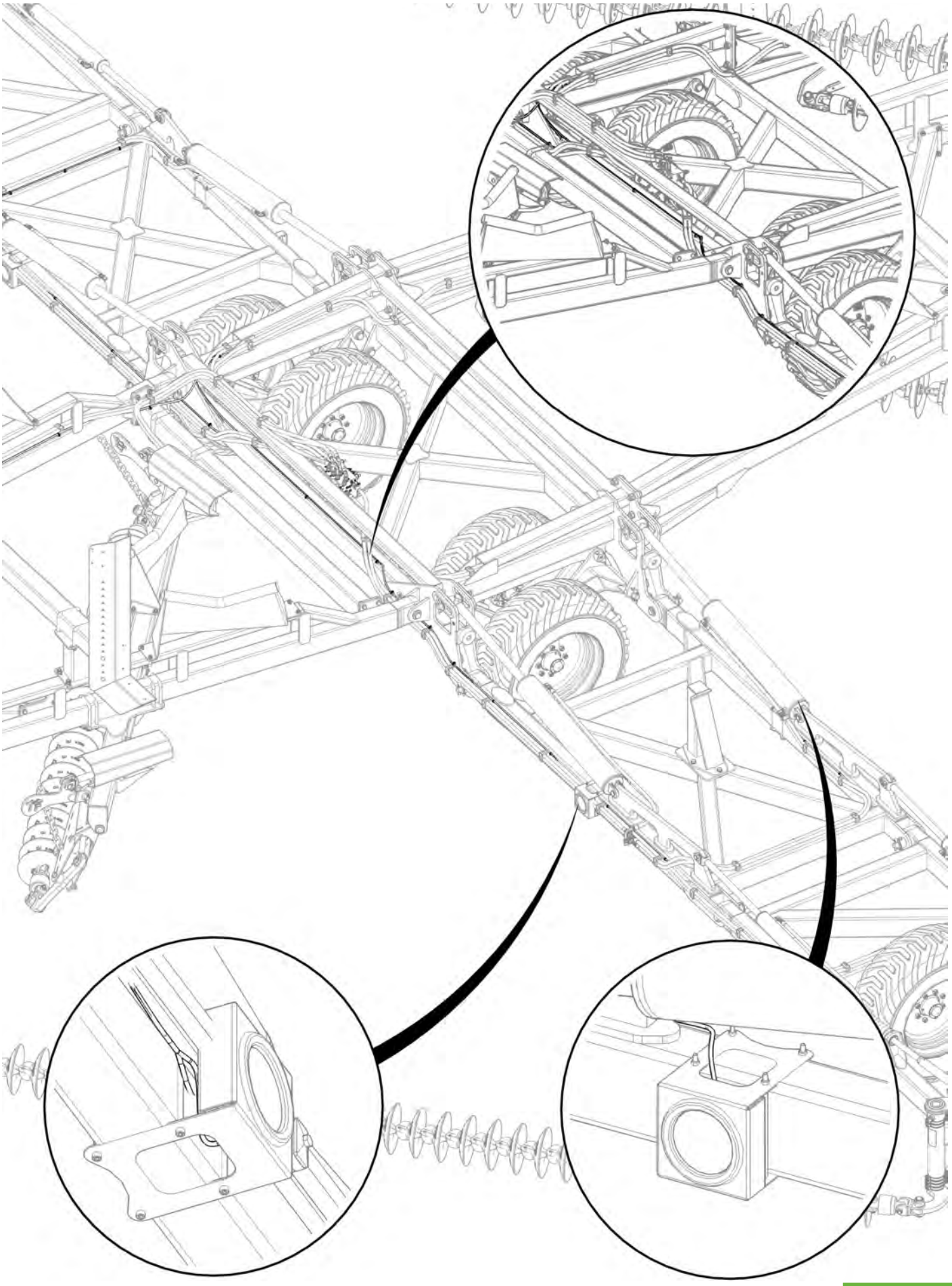

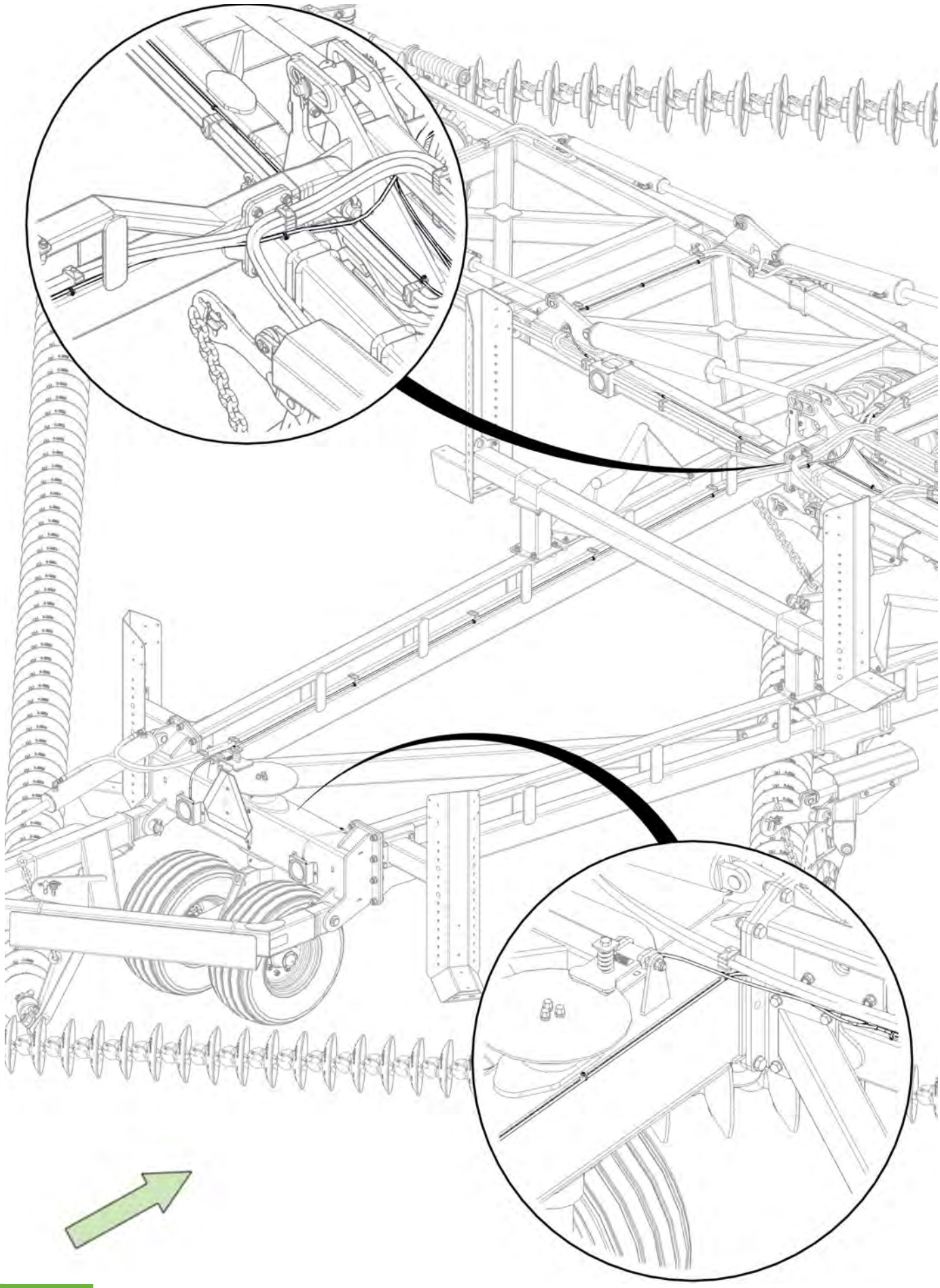

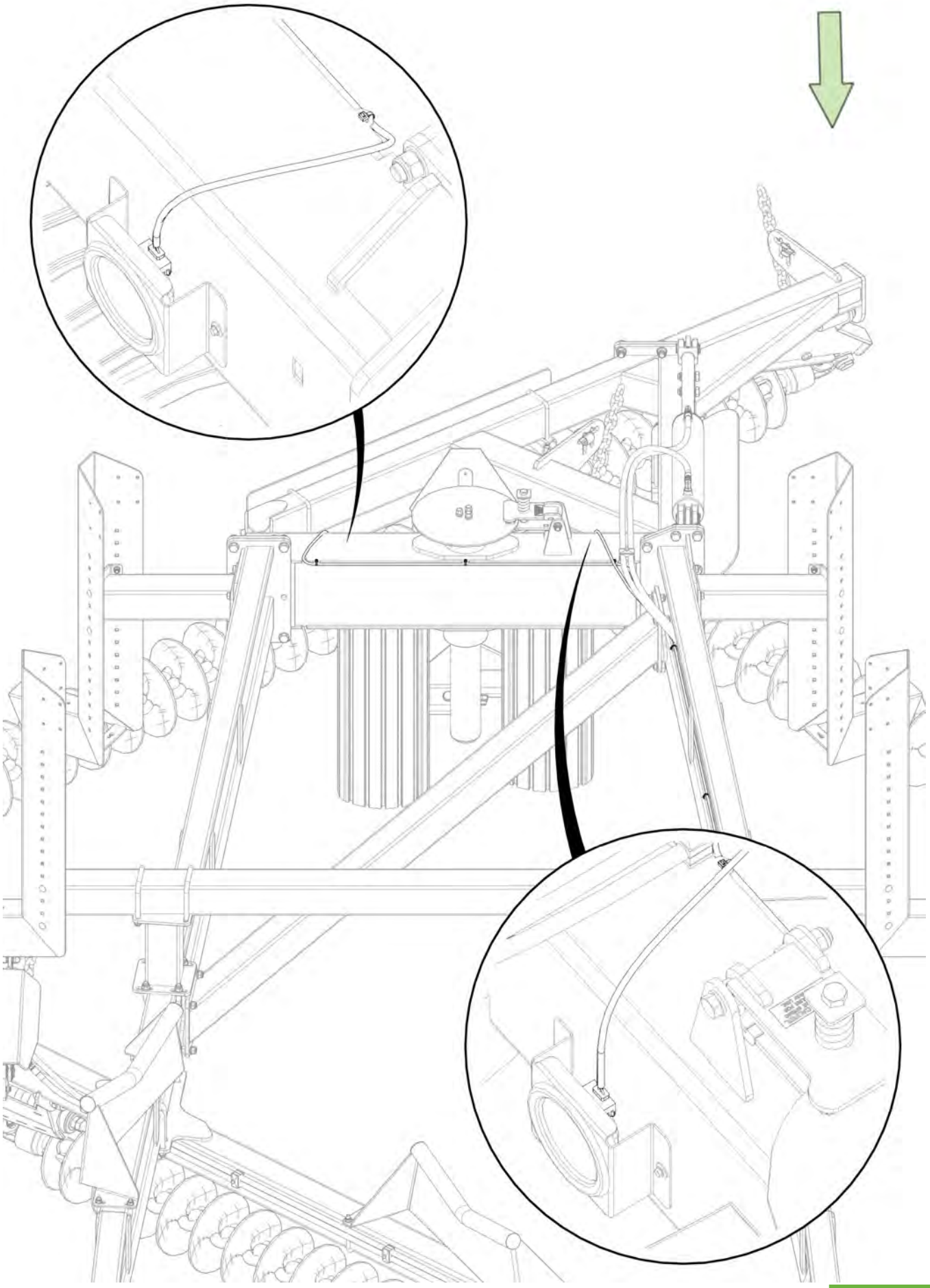

Section 5
Chain Assembly

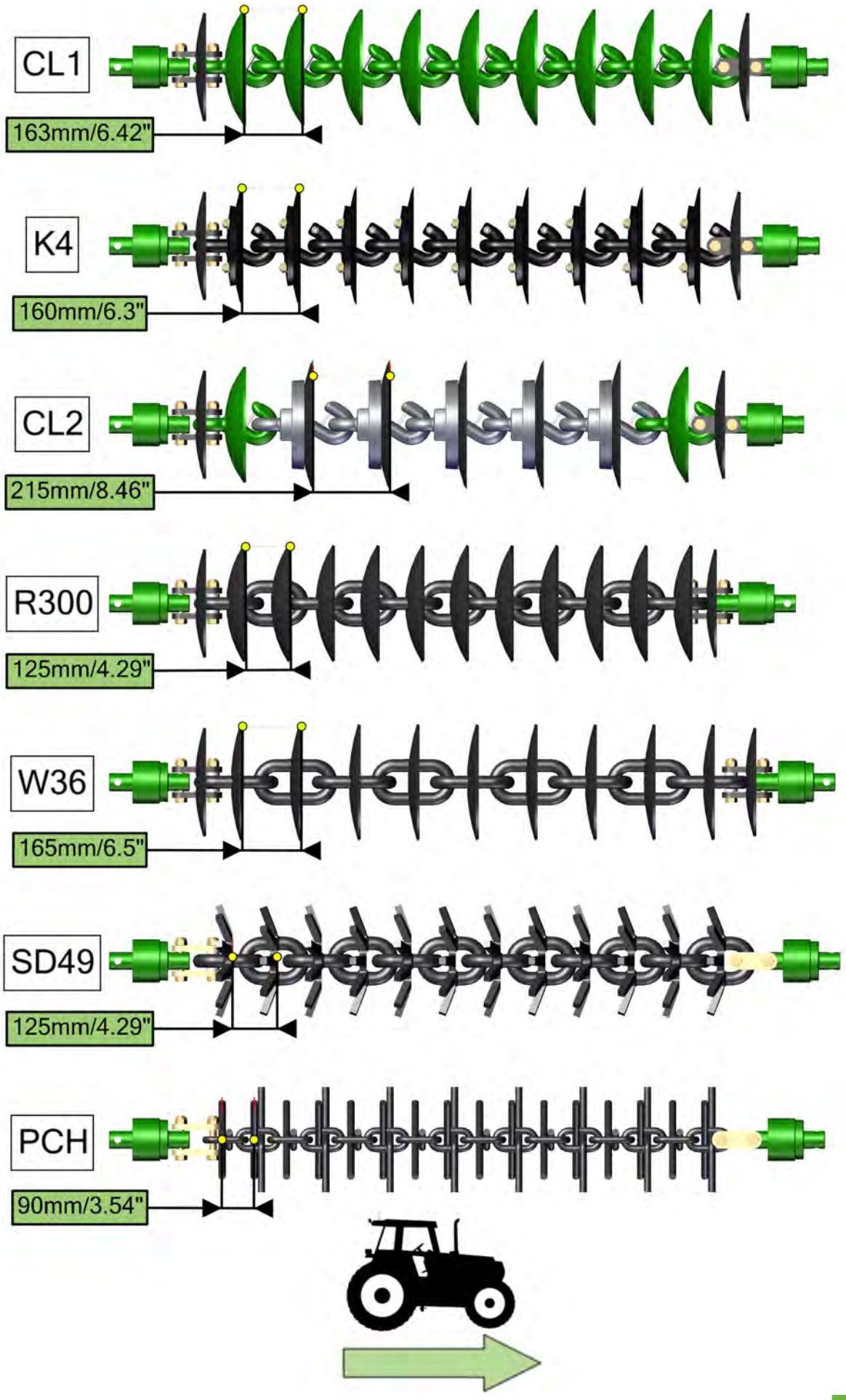
CL1
163mm/6.42"
K4
160mm/6.3"
CL2
215mm/8.46"
R300
125mm/4.29"
W36
165mm/6.5"
SD49
125mm/4.29"
PCH
90mm/3.54"

Item No.	Description	Number	Qty
1	Nyloc Nut M20/24	0221-NYL20/24	4
2	M20 x 110 / M24 x 120 grade 10.9 ZP Short Thread Bolt	0211-20110ST/0211-24120ST	4
3	20/24mm Bolt Swivel Unit	0802-PCHB55 / 0802-PCHB553	2
4	Disc Chain Tie Plate Link 20mm / 24mm	0802-DCTP-20 / 0802-DCTP-24	2
5	Tie Plate Bush	0801-PCDCS55	2
6	Roll Pin Zinc Plated 3/8" x 3"	0262-3-8X3	1
7	CL1-B Chain Disc Link	0803-CL1	1

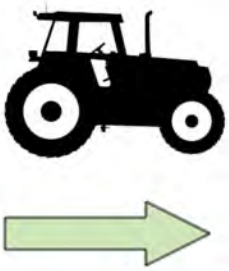

CL1 Disc Chain - unhook disc chain link/s from end of the disc chain

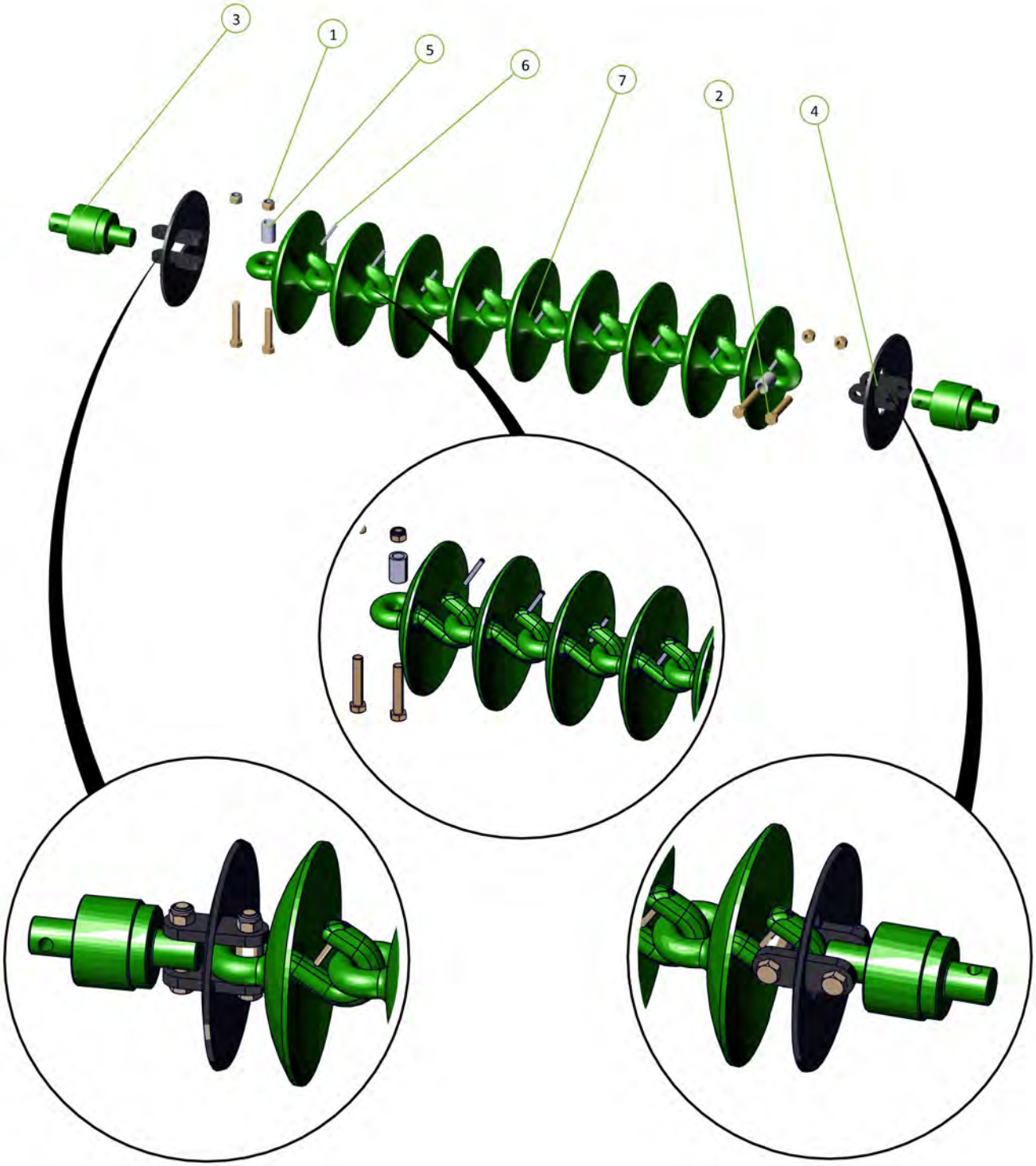

Fitting Cast Link Pins

Please install cast link retaining Pins (3/8" x 3" Roll Pin, part number 0262-3-8X3) on all cast disc links.
Failure to do this could lead to the discs becoming dislodged during transport causing severe damage or injury.

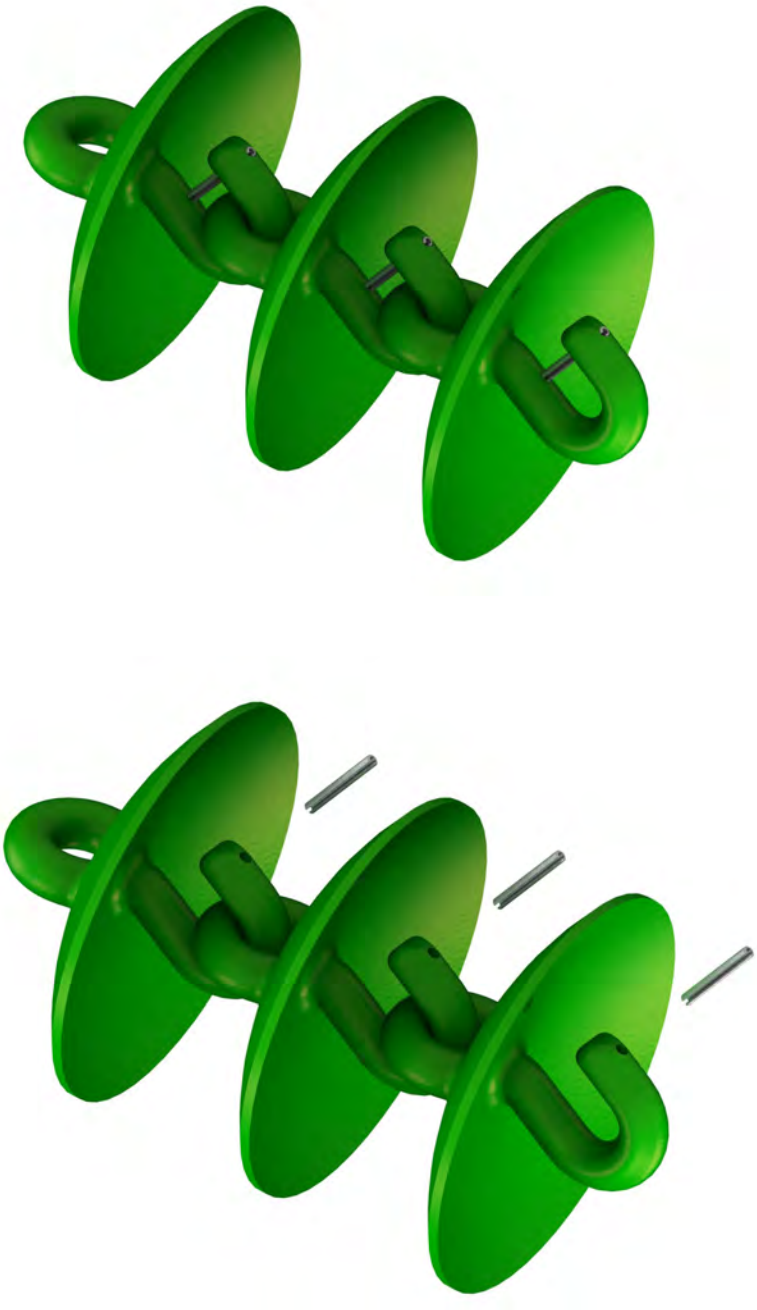

Item No.	Description	Number	Qty
1	K4 Disc Assembly	0803-K4	1
2	M12 x 55 grade 8.8 ZP Bolt	0211-1255	1
3	Nyloc Nut M12	0221-NYL12	1

K4 Disc Chain - unhook disc chain link/s from end of the disc chain

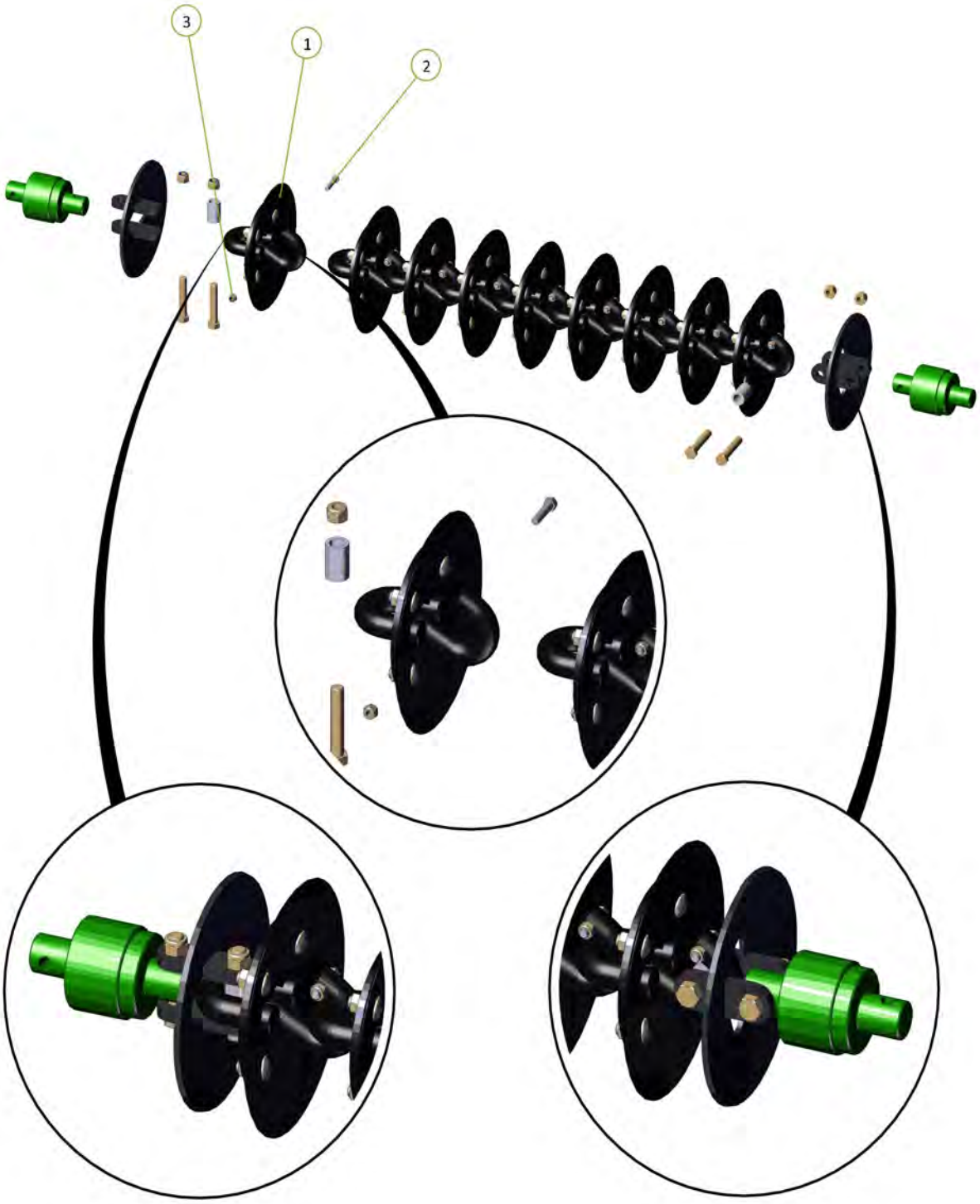

Item No.	Description	Number	Qty
1	0803-CL2-Link Assembly	0803-CL2	1
2	CL1-B Chain Disc Link	0803-CL1	1

CL2 Disc Chain - unhook disc chain link/s from end of the disc chain

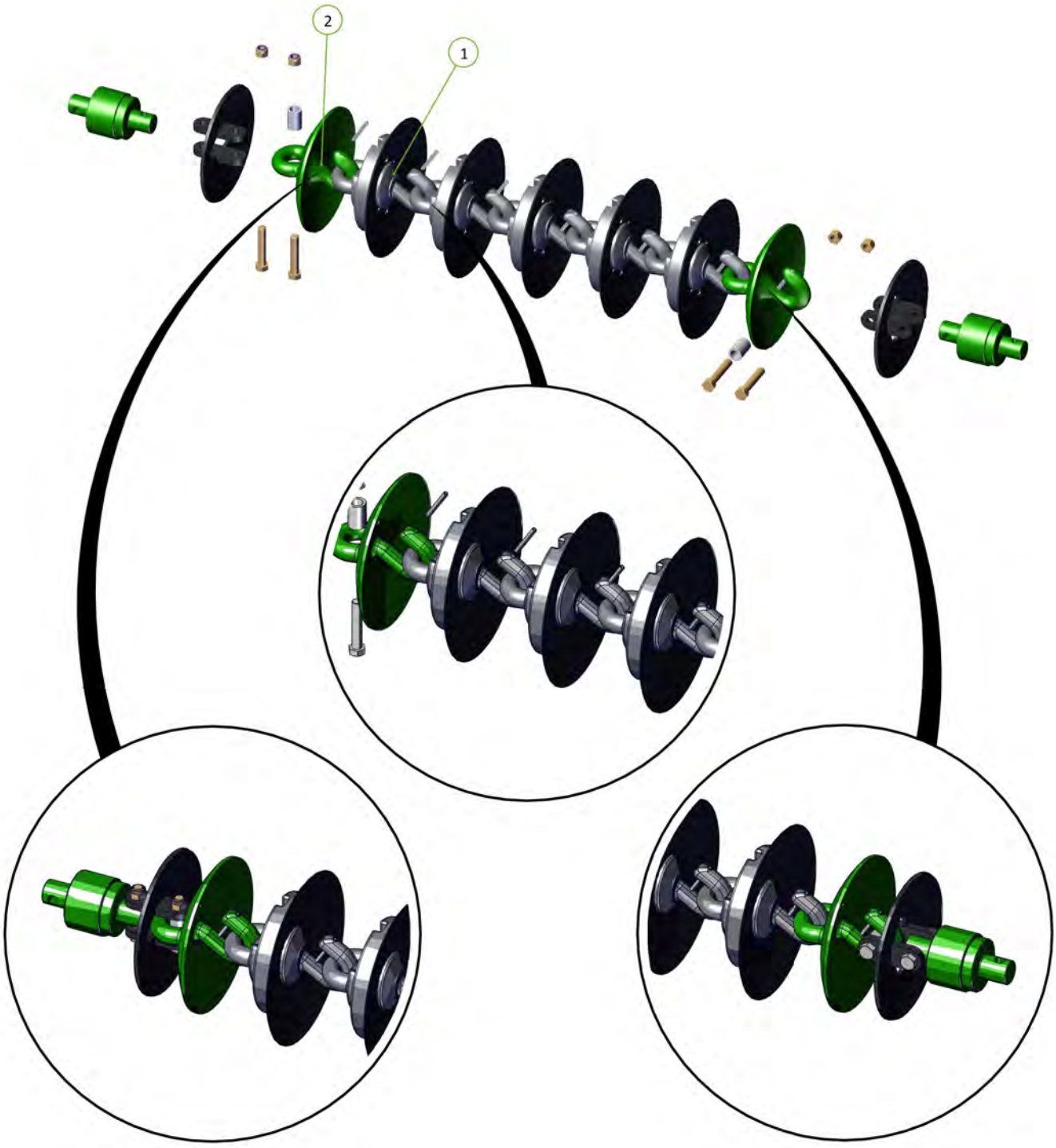

CL2 Chain Layout

Set	CL2	CL1
Front Left	38	2
Front Right	38	2
Front Modules	13	3
Front Set	89	7
Rear Right	40	15
Rear Left	40	2
Rear Modules	14	2
Rear Set	94	19
Total	183	24

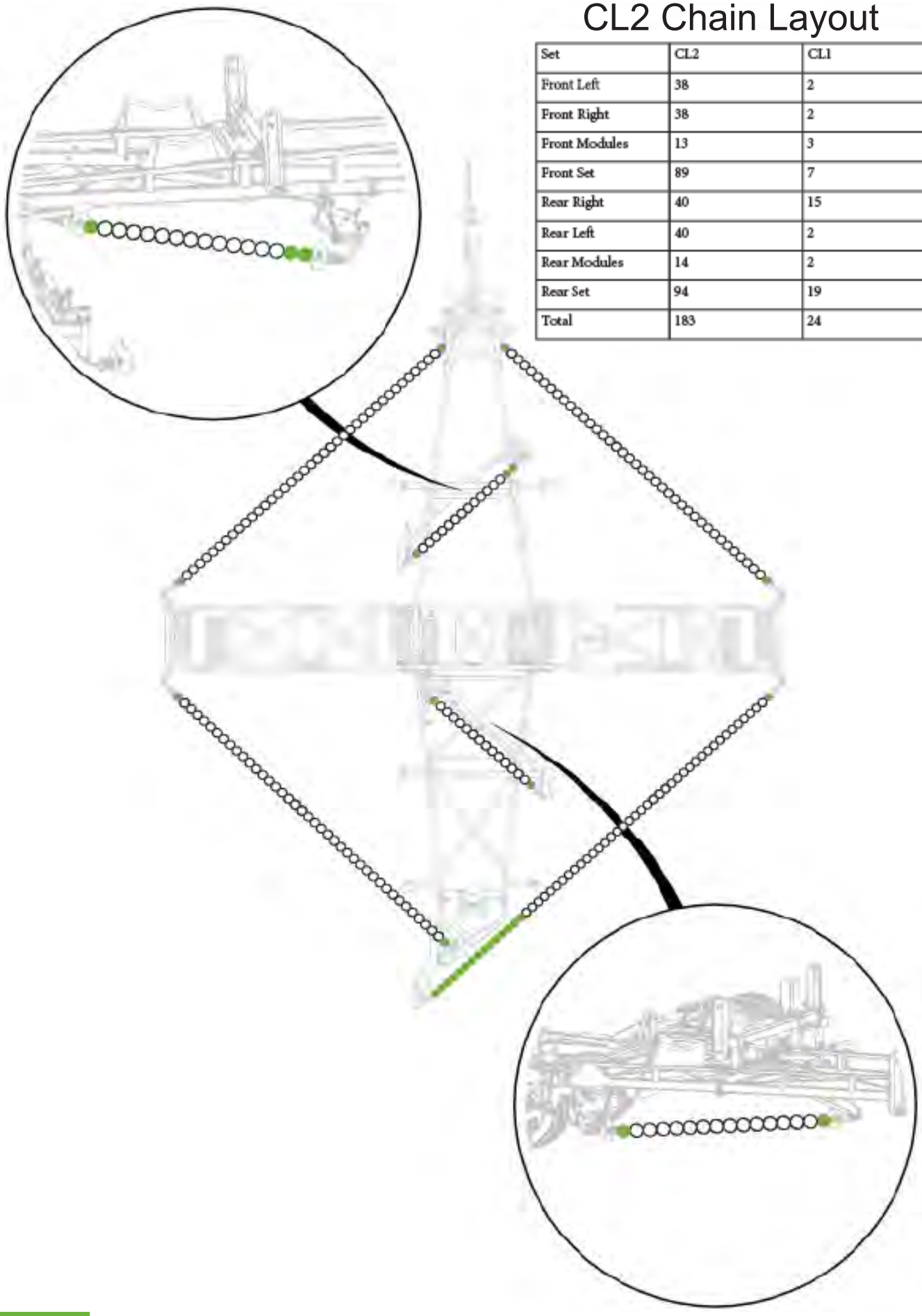

Item No.	Description	Number	Qty
1	W36/25 Chain Link	0803-W36	1

W36 Disc Chain - cut a disc chain link from the end of the disc chain

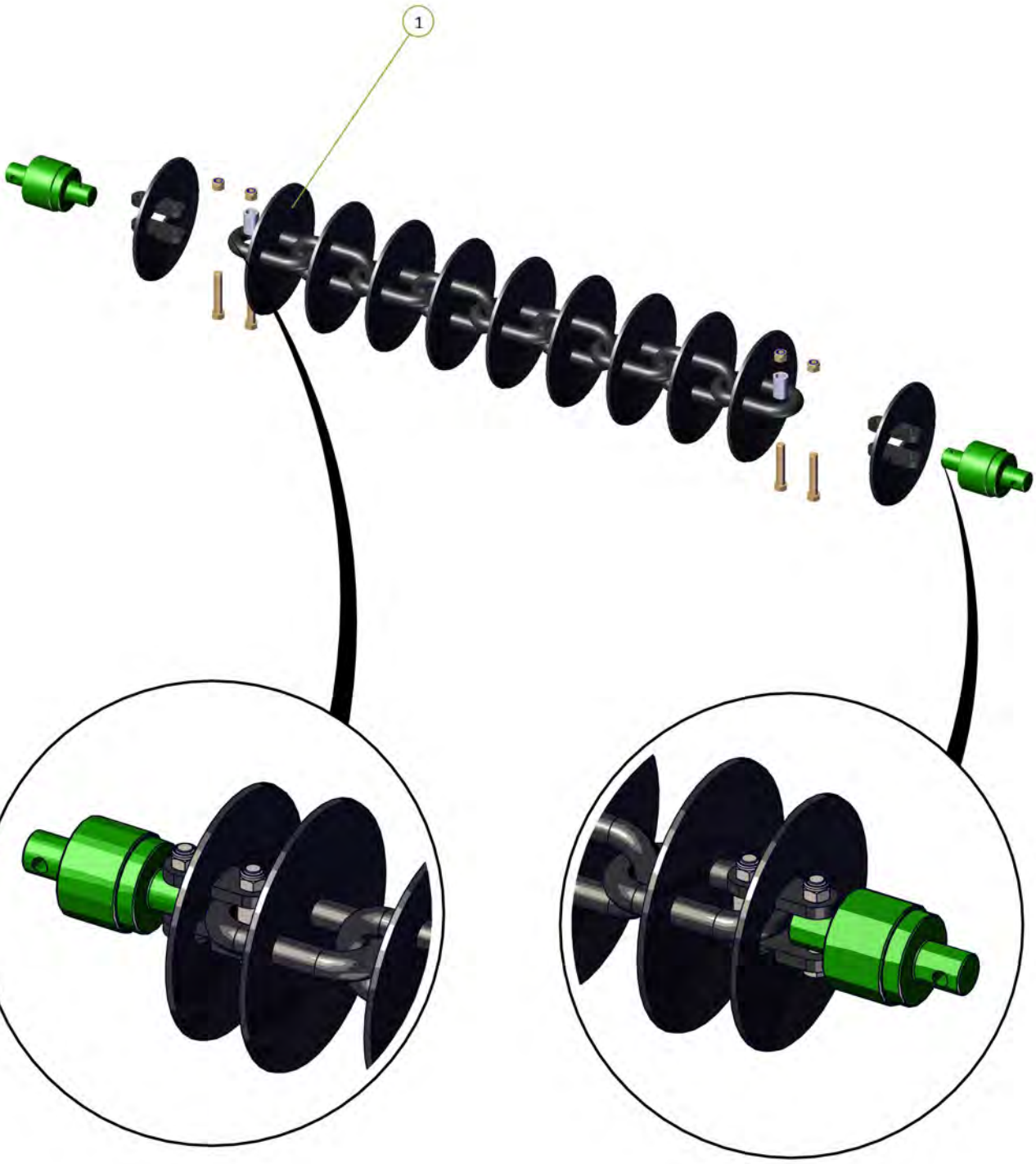

Item No.	Description	Number	Qty
1	10 Spike Disc Chain 49/27/5	0803-SD49	1
2	Tie Plate For 20mm Bolt/ Tie Plate For 24mm Bolt	0800-83.2 / 0800-83.3	4

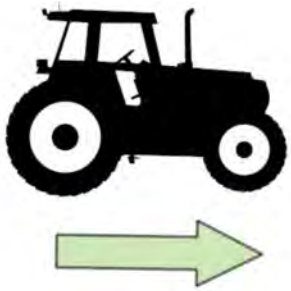

Spiked Disc Chain - cut a disc chain link from the end of the disc chain

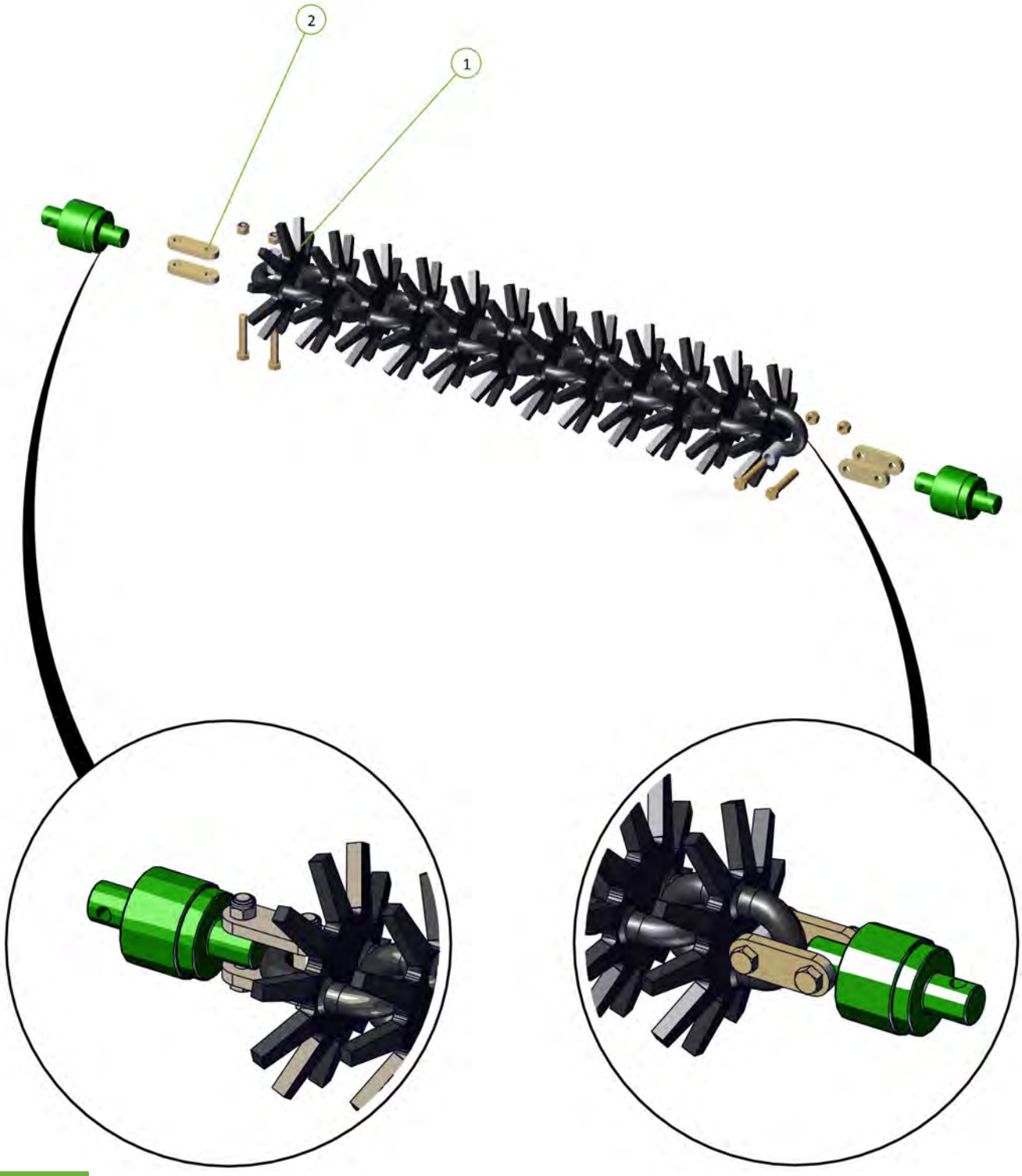

Section 6
Diagrams and Charts

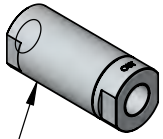

0343-924001261
1/2" BSPP 60 micron inline filter
max flow 60L/M & 5000psi max pressure

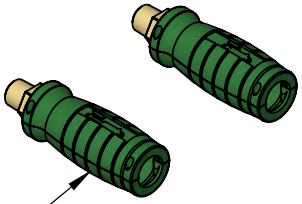

0325-HG-PT24E25R
Green 1/2" NPT Hydra
Grip Pair (Extend /Ret)

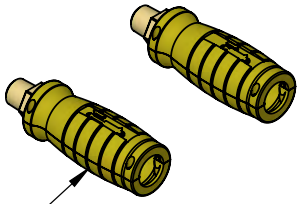

0325-HG-PT25E25R
Yellow 1/2" NPT Hydra
Grip Pair (Extend /Ret)

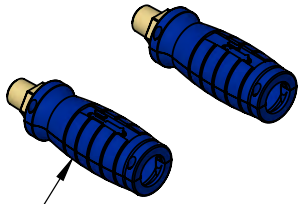

0325-HG-PT20E20R
Blue 1/2" NPT Hydra
Grip Pair (Extend /Ret)

0323-S71-0812
1/2"BSPP O Ring Male - 3/4"JIC Female
Adaptor

0323-S74-0812
1/2"BSPP O Ring Male - 3/4"JIC Male
Adaptor

0323-S15-1212
3/4"JIC Male - 3/4"JIC Female
90° Elbow

0323-S91-1212
3/4"JIC Male - 3/4"UNO Male
90° Elbow

0323-S90-1212
3/4"JIC Male - 3/4"UNO Male
Adaptor

0324-S19-121212
3/4"JIC Male
Tee

0324-S67-121212
3/4"JIC Male - 3/4"JIC Female - 3/4"JIC Male
Tee

0323-S88-1212
3/4"JIC Male - 3/4"UNO Male
45° Elbow

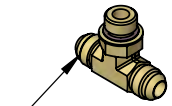

0324-S92-121212
3/4"JIC Male - 3/4"JIC Female - 3/4"UNO
Male Tee

0324-S68-121212
3/4"JIC Male - 3/4"JIC Female - 3/4"JIC
Female Tee

0325-R91-08M
1/2" BSPP
Quick Release Ball Coupling

0323-S12-1212
3/4"JIC Male - 3/4"UNO Male
Extended 90° Elbow

Kelly

Part Number	Description	For Machines Built:	Revision
	Hydraulic Fittings Parts Information		B

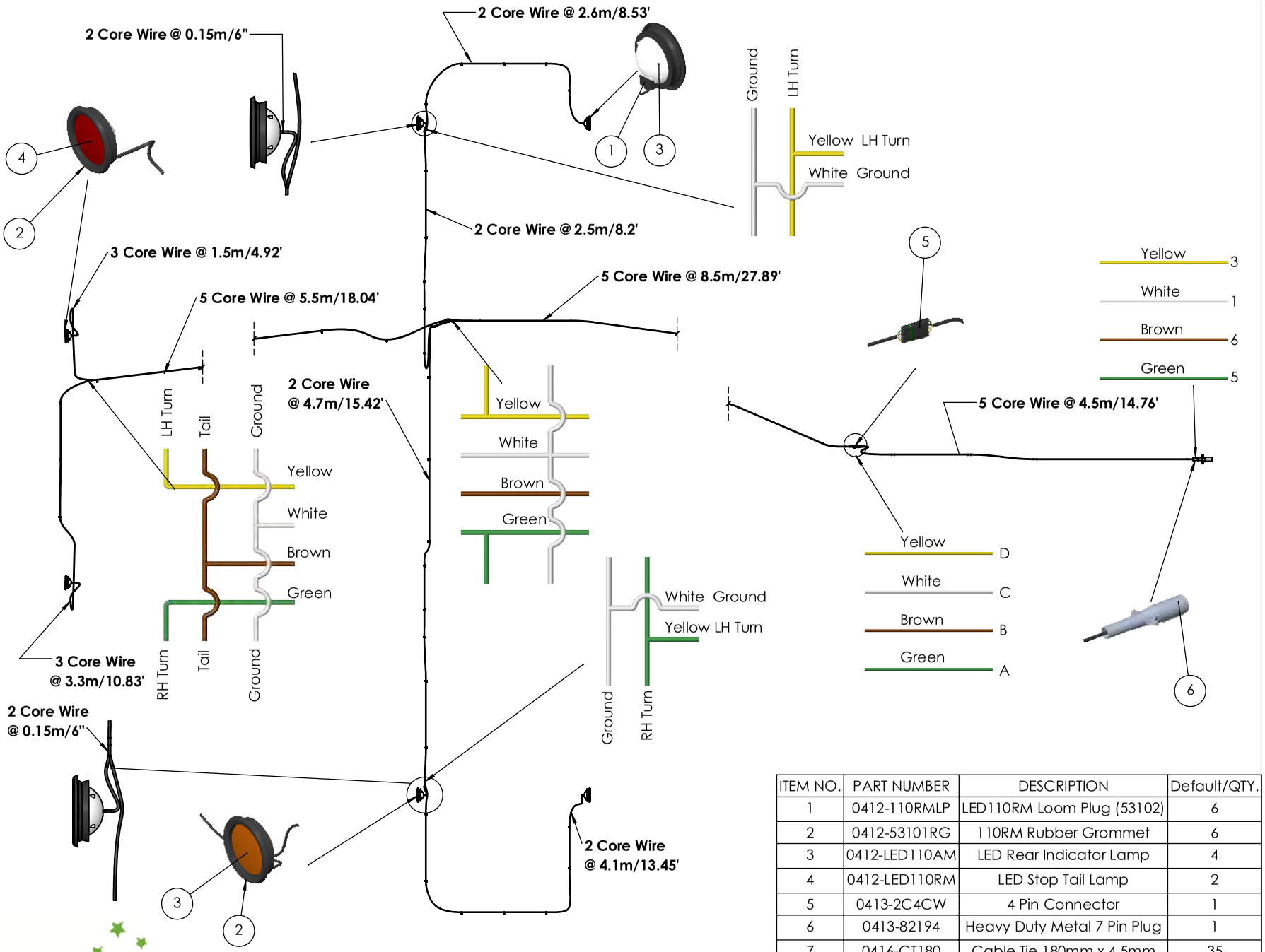

ITEM NO.	PART NUMBER	DESCRIPTION	Default/QTY.
1	0412-110RMLP	LED110RM Loom Plug (53102)	6
2	0412-53101RG	110RM Rubber Grommet	6
3	0412-LED110AM	LED Rear Indicator Lamp	4
4	0412-LED110RM	LED Stop Tail Lamp	2
5	0413-2C4CW	4 Pin Connector	1
6	0413-82194	Heavy Duty Metal 7 Pin Plug	1
7	0416-CT180	Cable Tie 180mm x 4.5mm	35

Kelly

Part Number	Description	For Machines Built:	Revision
1602-USLK46-2	46' Gen 2 - US Light Kit		A-0

Fixed housing end of swivel should always face forward

Rotating seal end of swivel should always face rearward

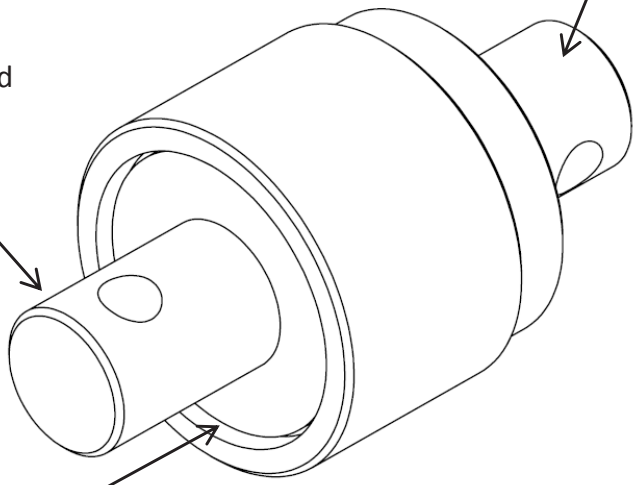

Mounting like this prevents dirt getting forced into the seals of the swivel increasing longevity of the swivel

For Example

Swivels attached to the leading ends of the chains should have the rotating seal end attached to the chain like shown

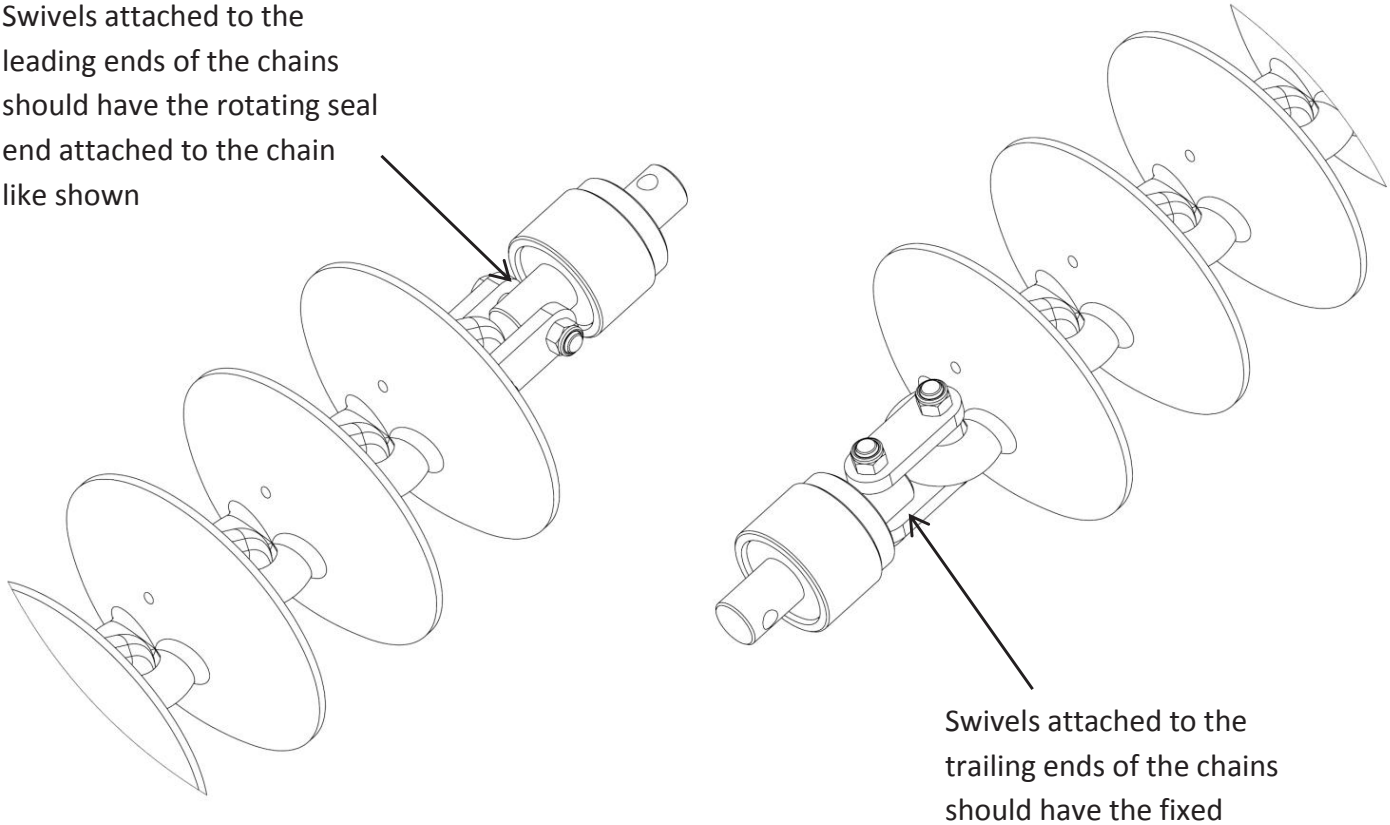

Swivels attached to the trailing ends of the chains should have the fixed housing end attached to the chain like shown

Operating speeds

Operating speeds for normal conditions	
Chain type	**Speed**
Prickle Chain	6-10 Mph / 10-16 kmph
Disc Chain	6-8 Mph / 10-12 kmph
Transport / towing on roads	15 Mph / 25 kmph

Tyre pressure

Tyre size	Ply	PSI	KPA
16.5L x 16.1	14	36	250
H40 x 14.5-19	26	60	410
11L - 15	10	44	300
15.5/80/24	16	58	400
16.5/85/24	16	55	380
550/60/22.5	16	40	280
400/60/22.5	16	50	350
12.5/80/18	14	85	590
15.0/70/18	14	71	490

Chain Harrow specifications

Model	4614
Working width	45’9/13.97m
Transport width	12’9/3.90m
Transport height	12’10/3.93m
Transport length	55’11/17.06m

Disc Chain Lengths

Model		Length	CL2	CL1	K4	W36	R300	SD49	Prickle chain
			CL2 disc chain also requires CL1 disc chain						
4614	Front right	28.15' / 8.58m	CL2 - 38 CL1 - 2	53	54	50	69	69	95
	Front left	28.15' / 8.58m	CL2 - 38 CL1 - 2	53	54	50	69	69	95
	Rear right	36.99' / 10.97m	CL2 - 40 CL1 - 15	67	69	64	88	88	122
	Rear left	29.23' / 8.91m	CL2 - 40 CL1 - 2	54	56	52	71	71	99
	Modules front	11.02' / 3.36m	CL2 - 13 CL1 - 3	20	21	20	27	27	37
	Modules rear	10.99' / 3.35m	CL2 - 14 CL1 - 2	20	21	20	27	27	37

For correct chain tension, chain links may need to be removed from the end of the chain as follows:

CL2 Disc Chain - unhook disc chain link/s from end of the disc chain
CL1 Disc Chain - unhook disc chain link/s from end of the disc chain
K4 Disc Chain - unhook disc chain link/s from end of the disc chain
Spiked Disc Chain - cut a disc chain link from the end of the disc chain
R300 Disc Chain - cut a disc chain link from the end of the disc chain
W36 Disc Chain - cut a disc chain link from the end of the disc chain
Prickle Chain - cut a prickle chain link from the end of the prickle chain

Section 7
Operation

Basic Operation

Unfolding:

1. Walk around and inspect the machine.
   a. Check that chains are not hooked on framework
   b. Check swivel bolts are in place and not broken
   c. Check th at height adjusting chains have not fallen out of their slotted plates during transport.
   d.Ensure front lift cylinder depth stops are fully engaged on cylinder shaft.
2. Lower front A frame to working height.
3. Unfold wings holding the hydraulic lever until both the main center cylinder pins have centered in their slots. (If chain pulls tight during unfold, stop and inspect if chain is hooked)
4. Lower rear tail by holding hydraulic lever until tail and modules are completely lowered to working position.
5. Walk around and check that all chain links are straight and that working height of all swivels is correct for field conditions. Adjust if neccessary.
6. Move off with all chains in working position. If neccessary it is acceptabe to raise front A pull to transport height. This will lift the front chains off the ground and reduce the load on the tractor. Lower the front A pull once moving satisfactorily.

Folding:

1. Lower the front A frame to working height. (This is important to ensure that all chains locate correctly in their transport rests).
2. Raise the Rear Tail and modules by holding the hydraulic lever until they come to a complete stop.
3. Fold the wings. They should move as follows; main center cylinders will retract, one or both, until the wings stand vertically. The left outer wing then the right outer wing will fold down.
4. Raise front A frame to transport height.
5. Walk around and check that chains have located correctly in transport rests.
   (3009 only, close wing transport lock valves).

Setting for correct chain tension

Wings

Use the spanner supplied. Loosen the lock nut adjacent to the tensioner assembly body. Turn the tension bolt clockwise to compress the coil spring. Correct tension is acheived when spring retains its set length when operator rolls the chain fore and aft on the ground. Retighten the lock nut.

See table below

Spring Compression Length

Model	inches	mm
4614	12.4	315

When less than 4" (100mm) of thread remains visible on the adjustor bolt then a link must be removed from the chain

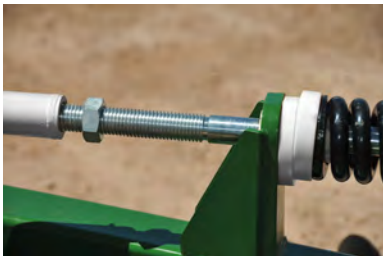

Modules

Loosen the lock nut on the draw bolt.
Tighten the adjusting nut clockwise until the outer face of the spring retaining washer is flush with the body of the module tensioning unit.
Retighten the lock nut.
If more than 8" (200mm) of thread is exposed then a link should be removed to maintain correct adjustment.

Importance of chain tension

Operational

It is imperative that the correct adjustment be maintained. Only through correct adjustment can a smooth and level finish be achieved in field working.
Loose chains lead to :

- Uneven performance across the width of the machine
- Uneven weed control
- Unsatisfactory incorporation
- Ineffective levelling
- Accelerated or premature chain wear
- Chains failing to engage with transport locators when folded
- Machine damage when folding or unfolding
- Uneven field surface with ridges and furrows being created. The leading 1/3rd of a loose chain is much more aggressive than the trailing 1/3rd and the center. This will mean that middle of the machine's front pair of chains will aggressively move soil outwards. The machine's rear pair of chains, if loose, have their aggressive 1/3rd near the wing extremity. It follows then that as the front discs push soil outwards, the least aggressive portion of the rear chain follows them and does not balance the soil movement. This is exacerbated at the wings, effectively creating a broad ridge about halfway out each wing. It won't be evident in one pass, but is possible if care is not taken over time.

A correctly adjusted machine will not cause this phenomenon.

Settings for correct working height

To adjust the swivel height at the wings, relocate one of the spacers either above or below the fixed mounting tube.

Adjustment

1	Loosen chain tension completely
2	Undo 2 x M10 bolts from corresponding spacer set and take the two halfs off of the drop leg tube
3	Replace it in the selected position after raising or lowering the drop leg
4	Reinstall the M10 bolts and re-tension the chain
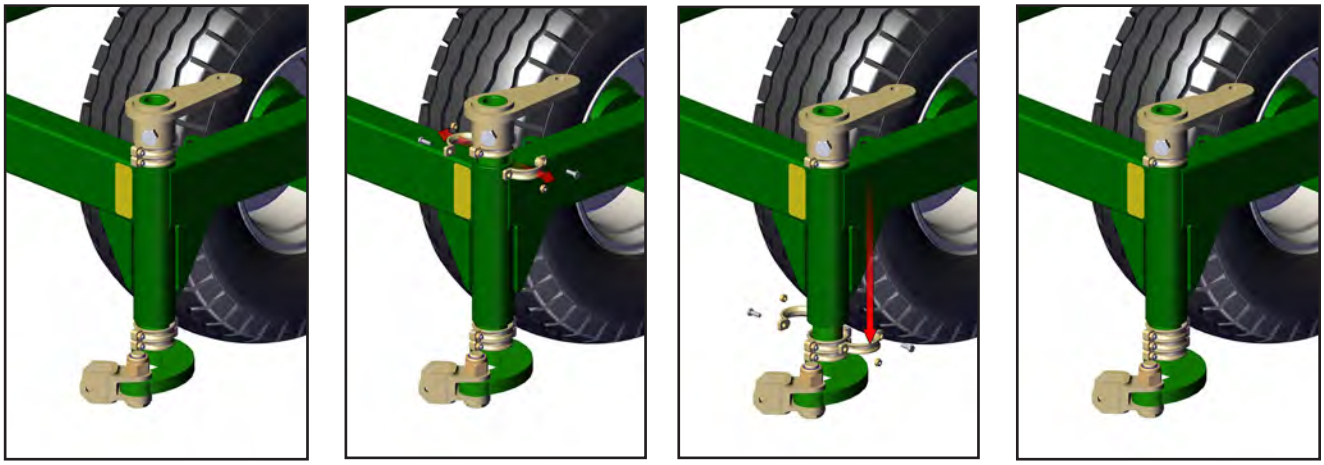
It is possible to install all spacers either above or below the mounting tube giving a maximum of 4" (100mm) of adjustment.